ENGLISH VERSION

FCC REGULATIONS

This device complies with Part 15 of the FCC Rules. Operation is subject to the following two conditions: (1) This device may not cause harmful interference, and (2) this device must accept any interference received, including interference that may cause undesired operation.

Note: This equipment has been tested and found to comply with the limits for a Class A digital device, pursuant to Part 15 of the FCC Rules.
These limits are designed to provide reasonable protection against harmful interference when the equipment is operated in a commercial environment. This equipment generates, uses, and can radiate radio frequency energy and, if not installed and used in accordance with the instruction manual, may cause harmful interference to radio communications. Operation of this equipment in a residential area is likely to cause harmful interference in which case the user will be required to correct the interference at his own expense.

Do not make any changes or modifications to the equipment unless otherwise specified in the manual. If such changes or modifications should be made, you could be required to stop operation of the equipment.

Canadian Radio Interference Regulations

This Class A digital apparatus meets all requirements of the Canadian Interference-Causing Equipment Regulations.

Cet appareil numérique de la classe A respecte toutes les exigences du Règlement sur le matériel brouilleur du Canada.

CE

We, Canon Inc., in Japan and Canon Europa N. V., in The Netherlands, confirm that the **HJ11ex4.7B/ HJ17ex7.7B/HJ17ex7.6B/HJ22ex7.6B/HJ21ex7.5B** series zoom lenses are conformity with the essential requirements of EC Directive (s)
by applying the following standards

EN55103-1, and EN55103-2

Note:

a) Applicable Electromagnetic Environment:
E1 (Residential area)
E2 (Commercial and light industrial area)
E3 (Urban outdoors area)

b) Use of shielded cable is required to comply with limits specified by above standards.

European Union (and EEA) only.

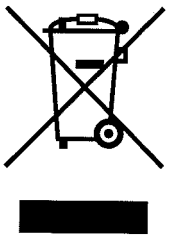

This symbol indicates that this product is not to be disposed of with your household waste, according to the WEEE Directive (2002/96/EC) and your national law. This product should be handed over to a designated collection point, e.g., on an authorized one-for-one basis when you buy a new similar product or to an authorized collection site for recycling waste electrical and electronic equipment (EEE). Improper handling of this type of waste could have a possible negative impact on the environment and human health due to potentially hazardous substances that are generally associated with EEE. At the same time, your cooperation in the correct disposal of this product will contribute to the effective usage of natural resources. For more information about where you can drop off your waste equipment for recycling, please contact your local city office, waste authority, approved WEEE scheme or your household waste disposal service.

Your cooperation in the correct disposal of this product will contribute to the effective usage of natural resources and will avoid incurring administrative sanctions according to art. 50 and following of Italian legislative decree 22/97.

For more information regarding return and recycling of WEEE products, please visit www.canon-europe.com/environment.

(EEA: Norway, Iceland and Liechtenstein)

部件名称	有毒有害物质或元素					
	铅 (Pb)	汞 (Hg)	镉 (Cd)	六价铬 (Cr(VI))	多溴联苯 (PBB)	多溴二苯醚 (PBDE)
电气实装部分	×	O	×	O	O	O
金属部件	×	O	×	O	O	O

O：表示该有毒有害物质在该部件所有均质材料中的含量均在 SJ/T11363-2006 标准规定的限量要求以下。

×：表示该有毒有害物质至少在该部件的某一均质材料中的含量超出 SJ/T11363-2006 标准规定的限量要求。



FOR P.R.C. ONLY

本标志适用于在中华人民共和国销售的电子信息产品、标志中央的数字代表产品的环保使用期限。

FOREWORD

Thank you for purchasing the Canon TV zoom lens series.
This lens comes with two operation manuals: Lens Manual and Information Display Manual, and Basic Start-up Guide.
This operation manual consists of the operation manual for the lens and Japanese/English technical documents.

Operation manual : Functions, operation of the lens in the standard configuration and notes on use ... E-3
Technical documents : External views and general circuit diagrams T-1

This operation manual is applicable for the following lens models:

HJ11ex4.7B HJ17ex7.7B HJ17ex7.6B HJ22ex7.6B HJ21ex7.5B	IRSE
	IASE
	WRSE
	WASE
	VRSE
	VASE

Information Display Manual contains the operation method and operation procedure of the information display.
Please refer to the Information Display Manual when it is needed.

STANDARD COMPOSITION OF THE LENS

Make sure all of the following items are included in the packing box.
(If you find any item missing, please contact the dealer from whom you purchased this product.)

UNIT	Q'TY
LENS BODY	1
HOOD CAP	1
HOOD	1
LENS CAP	1
DUST CAP	1
ZOOM LEVER (mounted on lens body)	1
BASIC START-UP GUIDE	1
OPERATION MANUAL (LENS)	1
(INFORMATION DISPLAY)	1

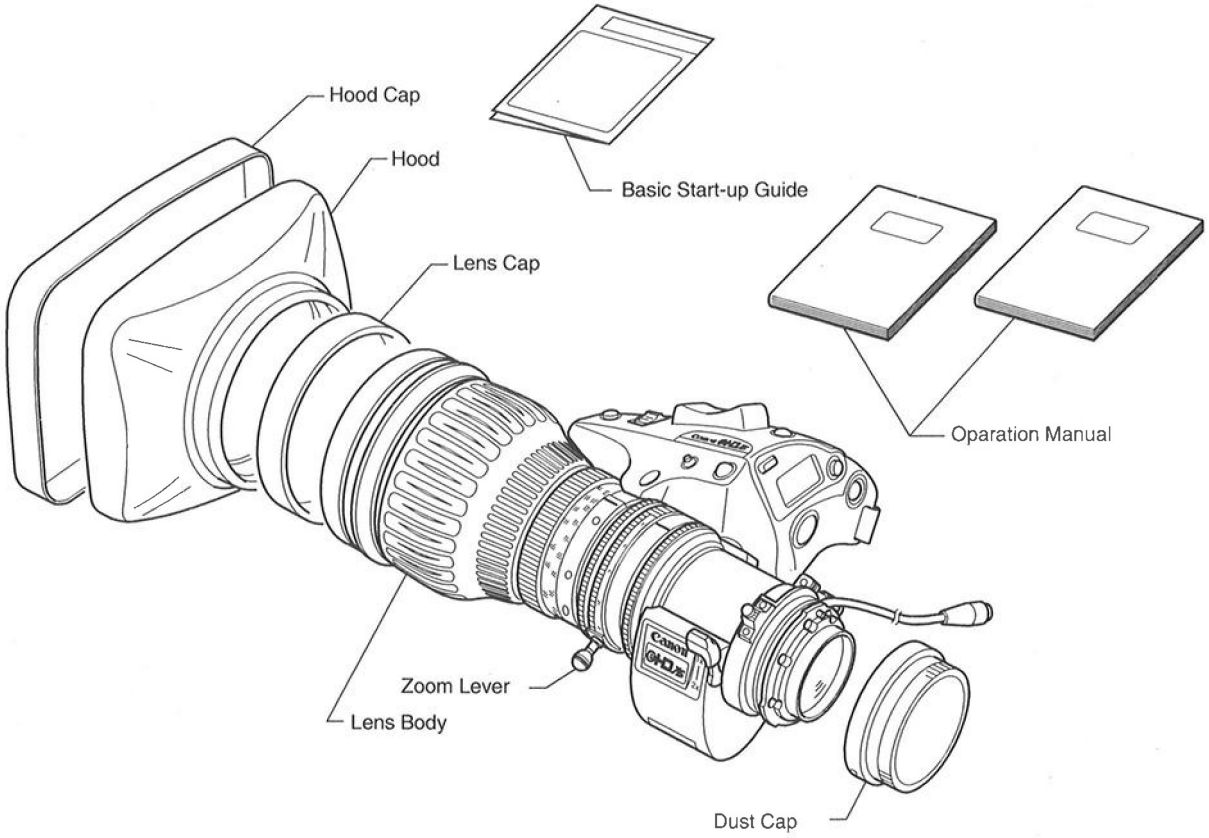

(The above drawing shows the IASE ; shapes of other models differ slightly from this sketch.)

*(NOTE):Storage environment

Check the following points, and make sure the place where the lens is stored satisfies the following conditions.

1) Store the lens only under the following ambient conditions.
   - Ambient temperature : -30℃ to +60℃
   - Ambient humidity : up to 60% RH (no condensation)
2) Do not suddenly move the lens from storage at a very cold ambient temperature into a warm room. Doing so may cause the lens to fog on the inside or may cause condensation.
3) Do not subject the lens to strong physical shocks or vibration.

Contents

FOREWORD E1

STANDARD COMPOSITION OF THE LENS E3

GENERAL SAFETY INFORMATION E6

NOMENCLATURE E10

TEXT STYLISTIC FEATURES E13

1.PREPARATION E1-1

HOW TO MOUNT THE LENS ON THE CAMERA

(1) MOUNTING THE LENS ON THE CAMERA E1-2
(2) MOUNTING THE HOOD ON THE LENS E1-3
(3) Initialize operation setting E1-3
(4) Power supply E1-3

FLANGE BACK ADJUSTMENT OF THE LENS E1-4

BASIC OPERATING PROCEDURE E1-5

AUTO IRIS GAIN ADJUSTMENT E1-6

(1) Adjustment using the auto iris gain adjusting trimmer E1-6
(2) Adjustment of the auto iris gain using the information display E1-7

INITIALIZE OPERATION SETTING E1-8

2. ZOOM OPERATION E2-1

MANUAL ZOOM OPERATION E2-2

SERVO ZOOM OPERATION E2-3

BEFORE STARTING SERVO ZOOM OPERATION E2-4

1) Zoom Seesaw Switch Operation E2-5
■ Maximum zoom speed volume E2-5
■ Zoom speed characteristics E2-6
■ Movement function E2-7
■ F-Hold function E2-8
2) Zoom Track Function E2-9
■ Setting the zoom track function to "ON" or "OFF" E2-9
■ Setting the zoom track positions E2-10

Concerning operations using the zoom demand E2-11

■ 1. Setting the zoom demand specifications E2-11
■ 2. Setting whether to enable or disable the operation of the maximum zoom speed volume for the zoom demand E2-11
■ 3. Zoom speed characteristics E2-12
■ 4. Setting the servo system from the zoom demand E2-13

3. FOCUS OPERATION E3-1

Manual focus operation E3-2

Servo focus operation ("A" type lenses only) E3-3

■ Setting the focus demand curve characteristics E3-3

4. IRIS OPERATION E4-1

■ Types of iris operation E4-1
MANUAL IRIS OPERATION E4-2
■ Momentary auto-iris operation E4-2
AUTOMATIC IRIS OPERATION E4-3
■ Iris A/M switch settings E4-4

5. SWITCH OPERATIONS, FUNCTIONS AND SETTINGS E5-1
ALLOCATING THE FUNCTIONS TO THE SWITCHES E5-2
SWITCH FUNCTION AND OPERATION E5-3

6. SERVO ZOOM AUTOMATIC PLAYBACK OPERATION E6-1
Before operation E6-2
■ Types of servo zoom automatic playback operations E6-2
(1) Shuttle Shot E6-3
(2) Speed Preset E6-6
(3) Framing Preset E6-9
■ 1. Framing Preset [Zoom] E6-10
■ 2. Framing Preset [Focus] ("A" type only) E6-12
■ 3. Framing Preset [Zoom, Focus] ("A" type only) E6-14

7. OTHER FUNCTIONS AND OPERATIONS E7-1
ENCODER OUTPUT SETTING E7-2
ESCAPE OPERATION E7-3
USER, ANALOG MODE, LOCK MODE E7-4
■ Lock mode E7-5
EXTENDER OPERATION
(For "IRSE" and "IASE" type lenses) E7-6
HOW TO CHANGE CROSSOVER MODE AND EXTENDER OPERATION
(For "WRSE" and "WASE" type lenses) E7-7
■ FOR-Normal 4 : 3 or 16 : 9 mode-Switchable 16 : 9 mode E7-7
■ FOR SWITCHABLE (4 : 3) MODE E7-8
HOW TO CHANGE CROSSOVER MODE
(For "VRSE" and "VASE" type lenses) E7-9
MACRO OPERATION E7-10

8. PRODUCT SPECIFICATIONS E8-1

9. ACCESSORIES (SOLD SEPARATELY)
AVAILABLE ACCESSORIES E9-2
SYSTEM CONFIGURATION FOR ZOOM AND FOCUS OPERATIONS E9-3

⚠ GENERAL SAFETY INFORMATION

The safety warnings and cautions provided on the product or in this operation manual must be observed. Failure to observe warnings and cautions provided to guard against hazards may result in injury or accident.
Read this operation manual carefully to familiarize yourself with its contents and ensure that you can operate the product properly.
Also, store this manual in a safe place where it can easily be referenced whenever required.

This operation manual uses the following symbols and terms to identify hazards to protect you and others by aiming to prevent the occurrence of accidents.

⚠ WARNING	Indicates hazardous situations which, if not heeded, may result in death or serious injury to you or other persons.
⚠ CAUTION	Indicates hazardous situations which, if not heeded, may result in minor or moderate injury to you or other persons, or damages to your property.
*(NOTE)	Emphasizes essential information which, if not heeded, may render the product unworkable or cause it to function improperly. Also, provides helpful information for operation.

HANDLING THE PRODUCT

⚠ WARNING

1. Never allow water to enter or be spilled on the product. Immediately stop using the product if water enters the product. Otherwise, a fire or electric shock hazard may result.
2. Do not stare at the sun or other source of high-intensity light through the lens. Doing so may result in injury to your eyes.

⚠ CAUTION

1. Do not drop the lens when transporting it or when attaching or detaching it to or from the camera head. The lens may fall, possibly causing injury.
2. Make sure all mountings are tightened securely. If any of these mountings becomes loose, the lens may fall, possibly causing injury.
3. Always grasp the connector itself when connecting or disconnecting the lens cable. Pulling on the cable portion may result in damage to the cable, such as exposure or breakage of the conductors.
   Power leaking from a damaged cable may present a fire or electric shock hazard.
4. Inspect all mountings periodically (about every 6 months to 1 year) to make sure they are securely tightened, and tighten any loose portions.
   Otherwise, the lens may fall, possibly causing injury.
5. If it becomes necessary to repair this product, or to perform any operations or adjustments not mentioned in this operation manual, contact Canon's representative or the dealer who originally supplied the lens.

*(NOTE)

1. Protect the lens from strong impacts of shocks. Striking or dropping the lens may result in a malfunction.
2. This lens is not completely waterproof, so avoid exposing it directly to rain or snow.
   When the lens must be used in rain or snow, provisions should be made to prevent the lens from getting wet.
3. Under dusty conditions, the lens should be mounted or dismounted with a cover placed over the mount so as to prevent dust from entering into the interior.
4. Do not bring the lens, kept in a very cold ambient temperature, into a warm room, because the lens may fog on the inside or condensation may occur.
   In these cases, the lens cannot be used until these problems clear.
   If the lens must be used under such conditions, countermeasures are recommended.
   (For instance, before bringing the lens into a warm room, put it in a plastic bag with an effective desiccant, and then bring it into the room. After the temperature acclimatizes to the same level as the room temperature, take out the lens out of the plastic bag.)
5. If the lens is to be used in adverse environments, such as in a chemical laden atmosphere, consult with Canon's representative beforehand.

DEALING WITH ABNORMALITIES

⚠ WARNING

1. Should any of the abnormalities described below occur, immediately unplug the lens cable from the camera, and then contact Canon's representative or the dealer from whom you purchased the lens.
   · Smoke, abnormal smell, or abnormal noise.
   · Entry of foreign objects (including metals and liquids) inside the lens.

MAINTENANCE AND INSPECTION

⚠ WARNING

1. Unplug the lens cable and remove the lens from the camera, before attempting to clean the lens.
   Never use flammable substances such as benzene or thinner for cleaning, as this may present a serious fire or electric shock hazard.

*(NOTE)

1. Dust or fingerprints on the lens surface.
   Gently blow or brush away dust or dirt on the lens surface using a lens blower or a soft lens brush.
   Remove any fingerprints or other stains with a clean cotton cloth moistened with commercially available lens cleaning fluid or lens cleaning paper.
   Gently swirl the cloth or cleaning paper over the lens surface, starting at the center area of the lens, and then circling gradually outward until whole lens surface has been covered.
   Be careful not to rub dust across the lens, as the lens surface may be scratched.

2. Periodic inspection
   A periodic inspection about once a year is recommended.
   The inspection and maintenance interval depends on the operating conditions, the frequency of use, and the environment. If required, overhaul the lens.

STORAGE

⚠ CAUTION

1. Always attach the lens cap (or hood cap) and the dust cap before storing the lens.
   Stroring the lens without these caps attached may present a fire hazard. (Very bright light, such as sunlight, may be focused by the lens and cause a fire.)

*(NOTE)

1. Moisture inside the lens
   If the lens becomes damp because of use in fog, mist or drizzle, wipe off the moisture with a soft dry cloth and seal the lens together with an efficient desiccant in a vinyl bag to remove moisture which has entered into the interior.

TO THE CUSTOMER

1. Canon shall bear no responsibility for damage resulting from improper operation of this product by the customer.
2. Canon shall make no guarantees about the product quality, functions, or operation manual and its marketability and suitability for the customer's purpose.
   Moreover, Canon shall bear no responsibility for any damage, direct or incidental, that results from usage for the customer's purpose.
3. Canon shall make no guarantees about the results obtained using this product or the operation manual.
4. The product specifications, configuration, and appearance are subject to change without prior notice.
5. Repairs or modifications of this product, or adjustments not mentioned in this operation manual require special service manuals and training in some cases. For further information on these adjustments, repairs or modifications, contact your Canon dealer or your Canon sales representative.
6. Note that Canon may be unable to undertake servicing or repair of a product if it is modified without consulting Canon or your Canon sales representative.

Contact :
Broadcast Equipment Group
Canon Inc.
23-10 Kiyohara Kogyo Danchi,
Utsunomiya-shi, Tochigi-ken, 321-3298, Japan
TEL: 81-(028)-667-5711
FAX: 81-(028)-667-8672

©2007 Canon Inc.
All right reserved. No part of this operation manual may be reproduced or copied in any form or by any means without the written permission of Canon Inc.

NOMENCLATURE

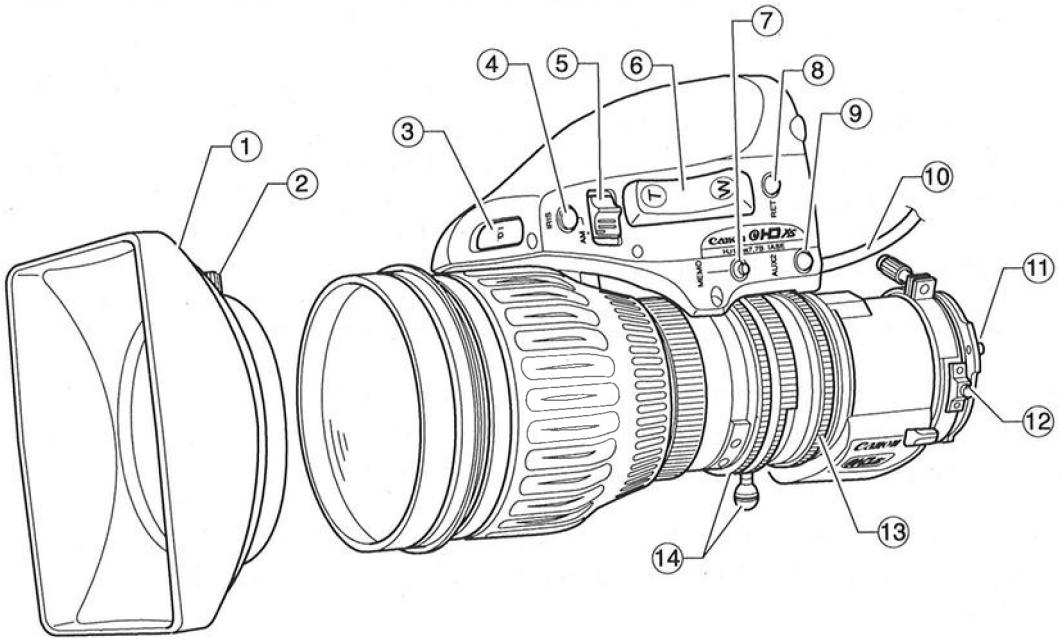

(The above drawing shows the IASE ; shapes of other models differ slightly from this sketch.)

① Hood

This hood is used to cut or reduce ghosting / flaring

② Hood Lock Knob

Loosen or tighten this knob to remove or fix the lens hood on the lens.

③ Iris Gain Adjusting Trimmer

Adjust the iris gain.

④ Momentary Auto-Iris Switch (Momentary Automatic Iris Switch)

While pressing this switch, momentary automatic iris operation takes effective.

⑤ Iris Operation Change-Over Switch

Slide this switch to change from manual to servo iris operation or vice versa.

⑥ Zoom Seesaw Switch

Use this switch for servo zoom operation.
The zoom speed changes according to how far down the switch is pressed.

⑦ Memo Button (Memory Button)

Memorize the zoom position and/or zoom speed by pressing this button together with one of other but-tons (AUX1, AUX2, or Zoom seesaw switch).

● ⑧ RET Switch (Return Video Switch)

While pressing this switch, the external video sent to the camera can be seen on the viewfinder.

● ⑨ AUX2 Switch

Press this button to zoom to a preset zoom position.

⑩ Lens Cable

Power and signals are sent to the lens from the camera head through this cable.

⑪ Positioning Pin

Determines the mounting position of the lens.

⑫ Macro Button

Use this button to shoot a object which is closer than the M.O.D.

⑬ Iris Ring

Turn this ring to operate the iris manually.

⑭ Zoom Ring and Zoom Lever

Use the zoom ring and zoom lever to operate the zoom manually.

⑮ Connector for Remote Zoom Control (8 Pin)

Plug in the 8 pin connector from the remote servo zoom accessories.

⑯ Virtual & Zoom Remote/Focus Remote Connectors (20-pin)

This is used to connect the control accessory (equipped with a 20 pin connector) for zooming or focusing.
It is also used to connect to the interface of such as virtual system. It can output each positioning signal of zoom, focus, and iris by three methods: analog signals/encoder pulse trains/communications data through RS-422.
However, type "IRSE" lenses do not have a function as a focus remote connector, and can not output focus signals.

● : These are the nomenclature at the factory. Another function can be allocated instead.

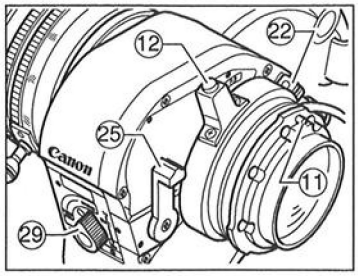

Type "WRSE" and "WASE"

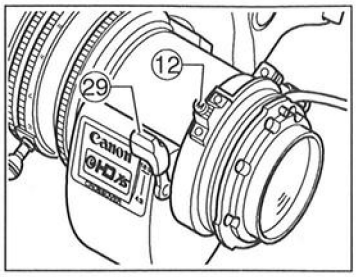

Type "VRSE" and "VASE"

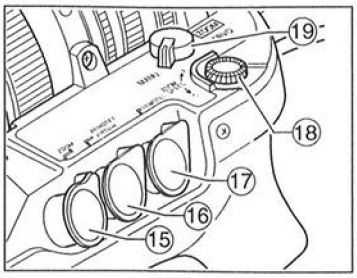

Type "R"

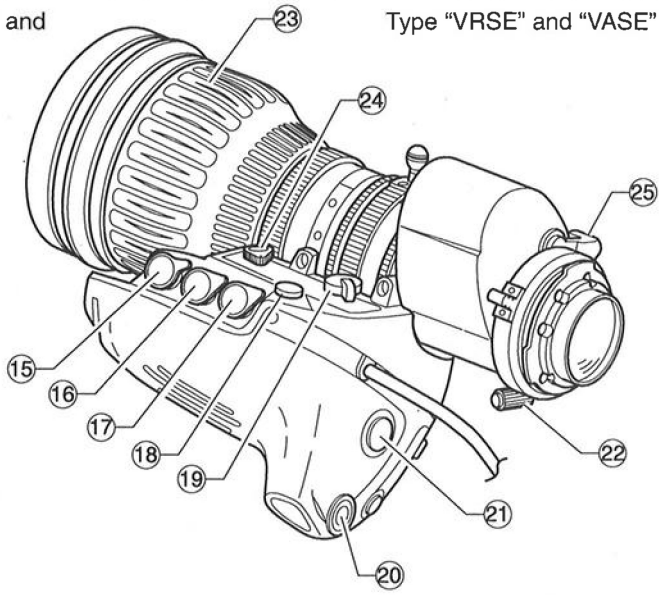

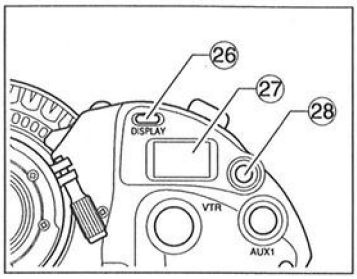

(17) Remote Zoom & Remote Focus Control Connectors (20-pin)

Plug in the 20 pin connector from the zoom or the focus control accessories.
However, type "IRSE" lenses do not have a function as a focus remote connector.

(18) Max. Zoom Speed Volume

The maximum zoom speed, when pressing the zoom seesaw switch farthest down, can be adjusted by turning this volume.

(19) Zoom Operation Change-over Knob

Use this knob to change from manual to servo zoom operation or vice versa.

(20) AUX1 Switch

This switch is used for shuttle-shot function.

(21) VTR Switch

Press this switch to start or stop the VTR.

(22) F.B. Adjusting Lock Screw

Turn this screw to tighten or loosen the F.B. adjusting ring.

(23) Focus Ring

Turn this ring to focus on the object.

(24) Focus Operation Change Over Knob

Use this knob to change from manual to servo focs operation or vice versa.
(Type "A" lenses only)

(25) Extender Lever

The built-in 2x extender can be moved in and out by swinging this lever.

(26) Display Switch

See the following page.

(27) Display

See the following page.

(28) Digital Function Selector

See the following page.

(29) Crossover Mode Lever

Use this lever to select the mode (aspect ratio) of switchable cameras. (This lever is only provided for "WRSE" and "WASE" type (see the figure at the bottom left), "VRSE" and "VASE" type (see the figure at the bottom center) lenses.)

● : These are the nomenclature at the factory.
Another function can be allocated instead.

Name of the information display

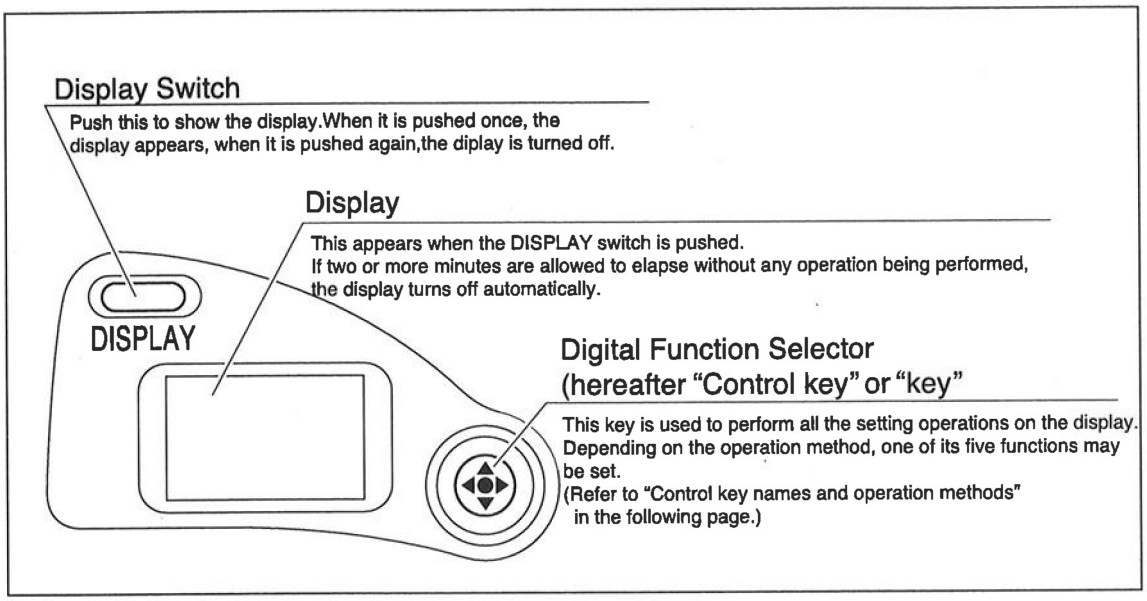

TEXT STYLISTIC FEATURES

Refer to the table belon for the text stylistic features in this operation manual.

Stylistic feature	Example	Explanation
"R" Type	With the "R" type lens.	IRSE lens indicated as "R" type.
"A" Type	The "A" type lens only.	IASE lens indicated as "A" type.
* * screen	The Top screen appears.	The name of the screen is indicated by underlining.
[ ]	An underline appears at [Frame1].	The name of a setting item is indicated within the [ ] square brackets.
{ }	Select {FAST}.	The name of an item or function to be selected is indicated by the { } set of parentheses.

Zoom and Focus operation mode is as follows for the "R" type lens and the "A" type lens.

Type	Operation	Operation mode
"R" Type	Zoom	Servo / Manual
	Focus	Manual
"A" Type	Zoom	Servo / Manual
	Focus	Manual (with built-in motor for servo)

Refer to the table below for the stylistic features of the information display operation in this operation manual.

Name	Operation	Detailed description
Set key	Push 	This key is pushed when { ↲ } has appeared on the screen display or when a selection is to be entered.
Right key	Move right 	The operation of this key takes effect when { ▶ } has appeared on the screen display.
Left key	Move left 	The operation of this key takes effect when { ◀ } has appeared on the screen display.
Up key	Move up 	The operation of this key takes effect when { ▲ } has appeared on the screen display.
Down key	Move down 	The operation of this key takes effect when { ▼ } has appeared on the screen display.

1. PREPARATION

(The illustrations included in this manual may differ slightly in shape for each model.)

HOW TO MOUNT THE LENS ON THE CAMERA

(1) MOUNTING THE LENS ON THE CAMERA

Before mounting the lens on the camera, make sure that camera's power is turned off.

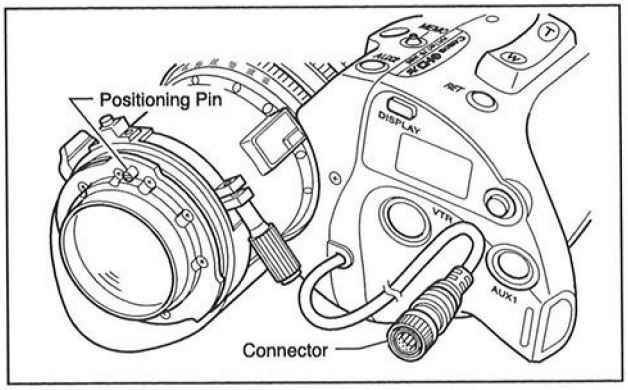

1. Position the camera horizontally or tilt it up slightly.

2. Turn the bayonet ring of the camera counterclockwise and remove the protective cap from the camera head.

3. Turn the dust cap of the lens counterclockwise and remove the dust cap from the rear of the lens.

4. Align the positioning pin on the lens mount with the slot on the camera mount and press the lens into the camera mount surface.

5. Turn the bayonet ring of the camera clockwise (as viewed from the lens front) until the lens mount is firmly fixed in place.

6. Connect the lens cable on the back of the drive unit housing to the appropriate receptacle on the camera head.

⚠ CAUTION: Never hold the lens barrel or band portion of the housing of drive unit to support the entire weight of the camera. Excessive force to the mount portion or the housing of drive unit may result in damage to the lens mechanism.

*(NOTE): 1)Refer to the camera's operation manual, as well as the lens's operation manual, when mounting the lens on the camera.

2)Be sure to keeo the protection cap and dust cap in a safe place so as not to lose them.

(2) MOUNTING THE HOOD ON THE LENS

1. Normally, the lens cap is attached to the lens, when the lens is shipped from the factory. Therefore, remove the lens cap from the front barrel of the lens.

2. Snap the hood on to the front barrel of the lens, and align the index mark on the hood with the mark on the front barrel of the lens. Then, tighten the hood securely by turning the hood lock knob clockwise.

3. Remove the hood cap from the hood.

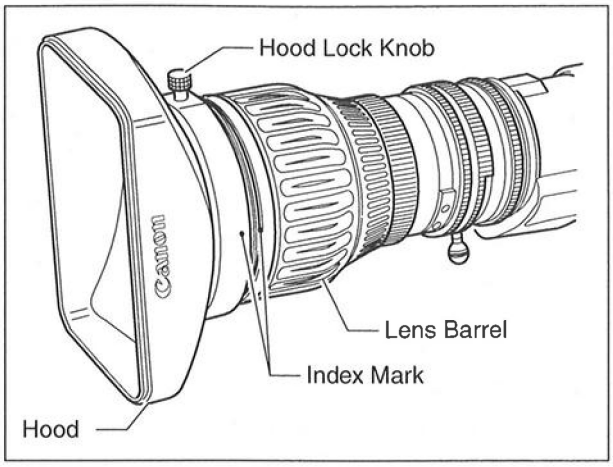

*(NOTE): Be sure to keep the lens cap and hood cap in a safe place so as not to lose them.

(3) Initialize operation setting

The follow signal of this lens does not output correctly if the lens does not operate the lens position of zoom, focus and iris when the power is turned. Also, the lens cannot operate a part of the SW function. For details, see "Initialize operation setting" in this manual.

(4) Power supply

The power of the lens is supplied when the power of the camera is turned on.

*(NOTE) For details on how to turn on the power of the camera, refer to the camera's Operation Manual.

FLANGE BACK ADJUSTMENT OF THE LENS

If the relationship between the image plane of the lens and the image plane of the television camera is incorrect, the object goes out of focus when the lens is zoomed.
In the case of 3 CCD cameras, the CCDs are permanently fixed and unable to move, so that only the lens can be adjusted.

Follow the procedure below to adjust the flange back of the lens.

Siemens Star Chart

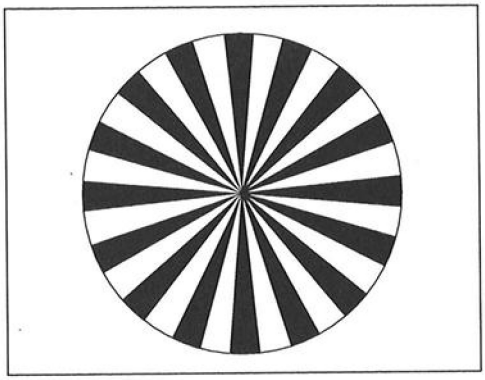

1. Select the green channel component video on the monitor.

2. Select an object at an appropriate distance (5 to 7meters recommended).
   A Siemens star chart is perfect for this adjustment. If no such chart is available, use any object that offers sharp contrast to facilitate the adjustment work.

3. Select the master lens position. (1x extender position for "IRSD", "IASD" lenses).

Type "IRSE", "IASE", "VRSE" and "VASE"

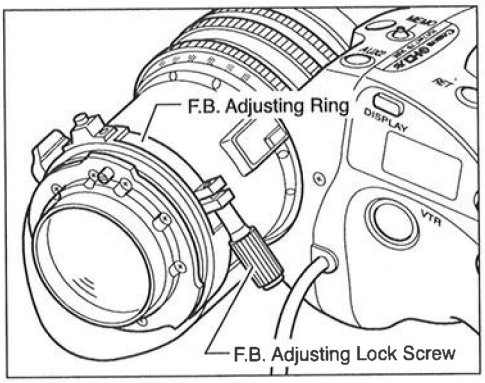

4. Open the iris of the lens fully.

5. Set the lens to the telephoto end by turning the zoom ring.

6. Bring the object into focus by turning the focus ring.

7. Set the lens to the wide end by turning the zoom ring.

Type "WRSE" and "WASE"

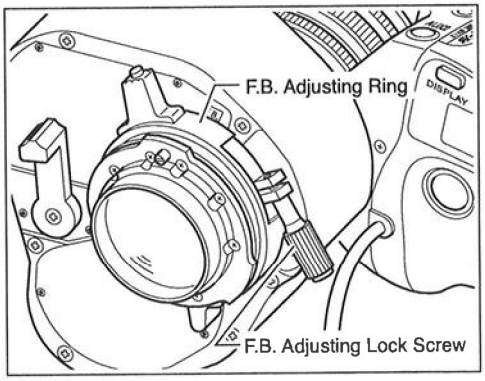

8. Loosen the flange back adjusting lock screw of the lens (located at the rear of the lens).
   Turn the flange back adjusting ring to bring the object into focus.

9. Repeat steps 5 to 8 several times until the object is brought into focus at both the wide and telephoto ends. After making sure that the object is in sharp focus, tighten the flange back adjusting lock screw. The adjustment procedure is now completed.

*(NOTE): 1) Use the Siemens star chart attached to the last page of this operation manual.

2) For a lens with a built-in extender, keep the extender lever at the 1x position during flange back adjustment. However, after completing the adjustment, check that the object is brought into focus at both the wide and telephoto ends with the extender.

BASIC OPERATING PROCEDURE

1 Turn on the power of the lens.

Note: For details on how to turn on the power of the lens, refer to the camera's Operation Manual.

2

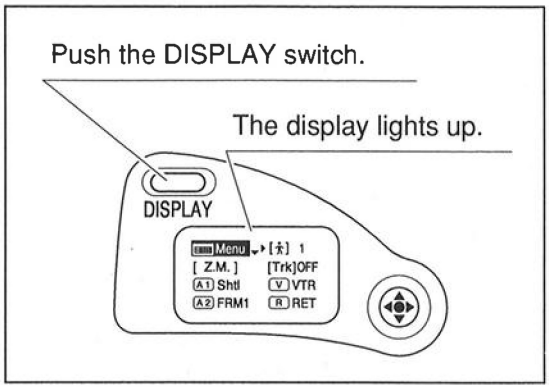

3

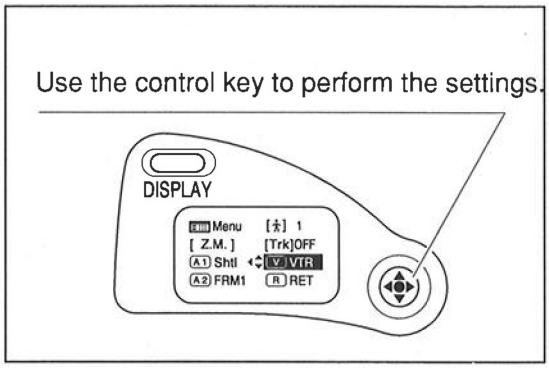

Please refer to the Information Display Operation Manual for the details of how to set the setting items.

Checkpoint: If the control key is not operated for 2 or more minutes, the display turns off automatically. (Auto OFF) However, while the Fol. screen is shown, the display will not turn off automatically no matter how many minutes elapse. It is turned off only by pushing the DISPLAY switch.

Checkpoint: Even when the display is turned off by AUTO OFF, the changes made to the settings are stored in the memory just as when the display is turned off by pushing the DISPLAY switch.

4

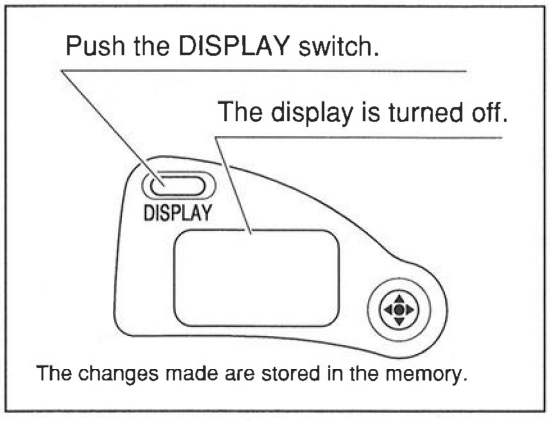

Note1: The changes made to the setting will be stored in the memory and turned off by pushing the DISPLAY switch while the display is shown.

Note2: In the case of the power of the lens turned off while the display is shown, the changes made to the setting may not be stored in the memory.

IMPORTANT: To restore the original settings

The initial factory settings can be restored at times when, for instance, settings have been performed incorrectly or as a trial.
For details, see "Resetting" on page E3-6 of the Information Display Operation Manumal.

Reference: Display that appears when the settings are to be reset

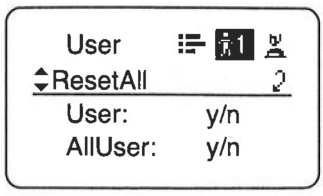

AUTO IRIS GAIN ADJUSTMENT

The auto iris gain is set properly at the factory. However, if you wish to change the auto iris gain setting, there are two ways to do this. Either way may be used but the setting implemented last takes precedence.

(1) Adjustment using the auto iris gain adjusting trimmer

An iris gain adjusting trimmer is located on the front of the lens drive unit. (See Fig. 1-1) If you wish to change the iris gain, use a small screwdriver or other tool to adjust the trimmer through the procedure described below.

1. Normally, the iris gain adjusting trimmer is protected with a rubber cap. Before starting the adjustment work, remove the rubber cap.

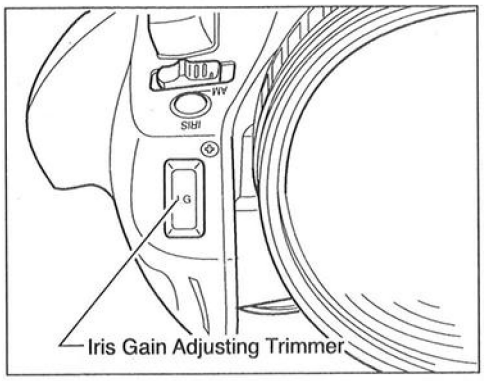

Fig. 1-1

2. Set the iris mode to Auto for both the camera side and lens side. (Refer to the camera operation manual for information about camera operations.)
On the lens, set the iris A/M switch to the A position*1.

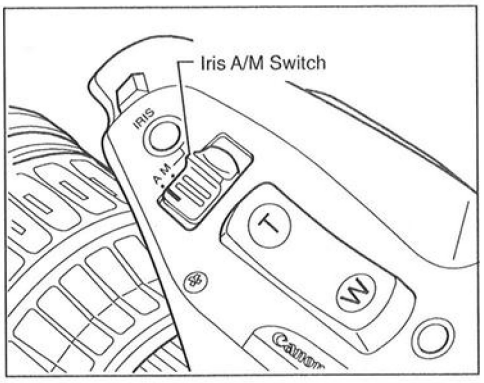

Fig. 1-2

3. Use a small screwdriver or other tool to turn the iris gain adjusting trimmer (marked as I.G. on the rubber cap) and set the level as shown below.

   Direction as viewed from the drive unit front
   - Clockwise direction ---------- Gain increases
   - Counterclockwise direction ------ Gain decreases

4. To determine the maximum gain, set the trimmer at a level where no hunting occurs while the iris is controlled from the camera.

5. After the adjustment is completed, put the rubber cap back on the iris gain adjusting trimmer.

*1: The operation setting can be changed for the iris A/M switch although [Auto] was allocated to the A position at the factory. To change the setting, refer to page E4-4.

(2) Adjustment of the auto iris gain using the information display

1. Push the DISPLAY switch to turn on the display.

2. Select [I-Gain] using the control key, and then push the Set key. The display is switched to the [I-Gain] screen. (Fig. 1-3)

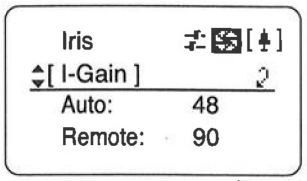

Fig. 1-3

3. Move the down key to select [Auto].

4. Move the left or right key until the numerical value which will serve as the desired setting appears on the display. (Fig. 1-4)

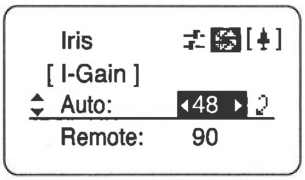

Fig. 1-4

5. Push the Set key. This completes the adjustment.

For information on the more detailed settings, refer to page E2-26 in the Information Display Manual.

INITIALIZE OPERATION SETTING

The system can be set the lens position when the power is turned ON. Since the lens features an encoder, the correct position of the lens must be detected each time the power is turned ON. If the initialize operation has been set to ON, then when the power is turned ON, the lens operates the initialize operation automatically which detects its position.

If it has been set to OFF, the lens position is detected when, in the course of normal operation, the lens has passed a specific position (normally near the center). However, at the initialize operation ON setting, the same operation as for the OFF setting will be performed if the lens is set to Manual.

NOTE 1: The follow-up voltage sent back to the camera and numerical values on the Fol screen are output correctly after the lens position has been detected.

NOTE 2: The lens cannot be controlled during the initialize operation. The initialize operation is completed with the return of the lens to where it was positioned before initialization commenced. However, if the lens is controlled by position, it will move to the control position rather than returning to where it was positioned before initialization commenced.

NOTE 3: If, while the initialize operation is set to ON and the lens is set to Manual, lens servo is selected before the lens position is detected, the initialization operation will commence at this point in time.

NOTE 4: In the case of a type which does not incorporate a focus motor, the FOCUS settings cannot be performed (there will be no FOCUS items).

NOTE 5: The initialize operation is always performed for the iris when the power is turned on.

NOTE 6: When the initialize operation is set to OFF, and the lens is in the Servo condition, it is impossible to use these functions: Shuttle Shot, Framing Preset, Speed Preset and Zoom Track because of uncompleted the lens position after the power is turned ON. To operate those functions, perform the lens position by turning the Servo switch.

NOTE 7: If the settings related to initialization are changed after the power is turned ON, the changes will not take effect. For the changes in the settings to take effect, turn the power OFF and then turn it back on.

ZOOM

Servo/manual switch	Selection item	How the lens position is detected
Servo	ON	When the power is turned on, the lens operates automatically and its position is detected. Then, it returns to where it was positioned when the power was turned on.
	OFF	The lens position is detected while performing motorized zooming.
Manual	ON or OFF	The lens position is detected while operating the zoom ring manually.

FOCUS

Servo/manual switch	Selection item	Demand/ no demand	How the lens position is detected
Servo	ON	Demand	When the power is turned on, the lens operates automatically and its position is detected. Then, it moves to the position of the demand's command signal.
		No demand	When the power is turned on, the lens operates automatically and its position is detected. Then, it returns to where it was positioned when the power was turned on.
	OFF	Demand	When the power is turned on, the lens operates automatically and its position is detected. Then it moves to the position of the demand's command signal.
		No demand	The lens position is not detected. When the demand is connected, the lens position is automatically detected, and then the lens moves to the position of the demand's command signal.
Manual	ON or OFF	No conditions	The lens position is detected by operating the focus ring manually.

Initialization Error

When the initialization operation has been set to ON, and the lens is set to Servo, the lens operates the lens position automatically right after the power is turned ON. If the lens does not operate the lens position correctly by any reasons, the screen is shown "Initialize Error!".

If the screen is shown "Initialize Error!", the lens is stuck in the flex control system condition or in other conditions. In this case, check a problem in the used condition, and clear the problem, and then set to the power again.

Error Display Screen

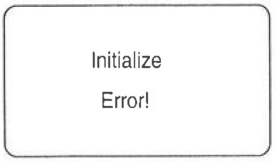

The settings are performed on the information display. A simple setting method is described here. For information on the detailed settings, refer to page E3-69 in the Information Display Manual.

1. Push the DISPLAY switch to turn on the display.
2. Push the Set key and move the left or right key to display the Info screen. (Fig.7-3)
3. Move the down key twice, and then press the Set key.The display is switched to the Initialize screen.(Fig.7-4)
4. Select [Zoom] or [Focus] using the down key.
5. Select {ON} or {OFF} using the left or right key.
6. For the changes in the settings to take effect, turn the power off and then turn it back on.

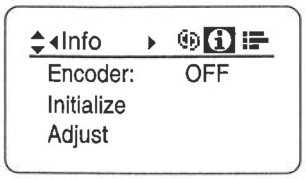

Fig7-3

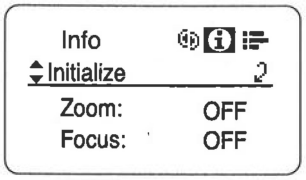

Fig7-4

2. ZOOM OPERATION

(The illustrations included in this manual may differ slightly in shape for each model. The operation methods, however, are identical.)

Zoom operation of this lens generally uses the methods described below. Use the suitable procedure according to your usage conditions.

■ Types of zoom operation

MANUAL ZOOM OPERATION --------- This is the most basic method where the user turns the zoom ring by hand.

SERVO ZOOM OPERATION---------- The built-in motor performs zooming based on the pressing of the switch.

MANUAL ZOOM OPERATION

1. Set the zoom operation change-over knob at the bottom of the drive unit to the MANU. position. (See Fig. 2-1)

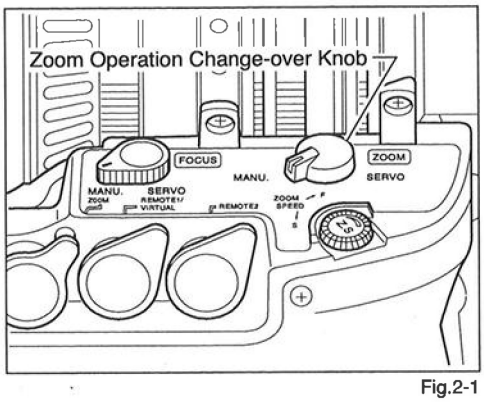

Fig.2-1

2. Turn the zoom ring (or grasp the zoom lever) to perform zoom operation to the Wide end or the Tele end based on the rotation directions below.

Viewed from camera

- Clockwise direction ---------- Wide end
- Counterclockwise direction ------ Tele end

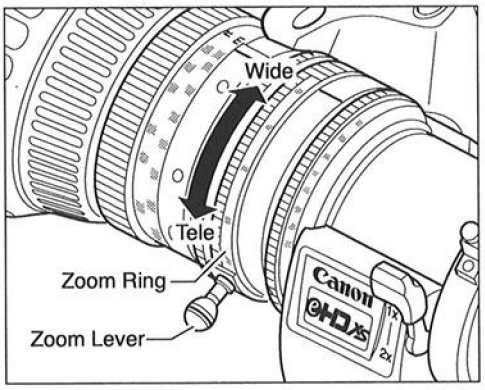

Fig. 2-2

Caution: To perform the manual zoom operation, be sure to always set the zoom operation change-over knob to the MANU. position. The camera can be damaged if excessive force is used to try to turn the zoom ring when the knob is left in the SERVO. position.

SERVO ZOOM OPERATION

In servo zoom operation, pressing the switch drives the motor built into the lens and performs zoom operation.
The servo zoom operations are broadly classified into (A) basic operations and (B) automatic playback operations. A zoom track function is provided to enable operations (A) and (B) to be performed in combination. The variations of the possible combinations are listed below.

■ (A) BASIC OPERATIONS (described in this section)

1) Zoom seesaw switch operation
2) Zoom seesaw switch operation + zoom track function (The function which can limit the control range to selected positions)

■ (B) AUTOMATIC PLAYBACK OPERATIONS (described in 6. Servo Zoom Automatic Playback Operaton)

3) Shuttle shot
4) Speed preset
5) Framing preset
6) Speed preset + framing preset
7) Shuttle shot + zoom track function
8) Speed preset + zoom track function
9) Framing preset + zoom track funcion
10) Speed preset + framing preset + zoom track function

A graphical representation of the various operations involving the (A) and (B) combinations is provided below.

SERVO ZOOM OPERATION-Variation Image

: Type of servo zoom that is operated

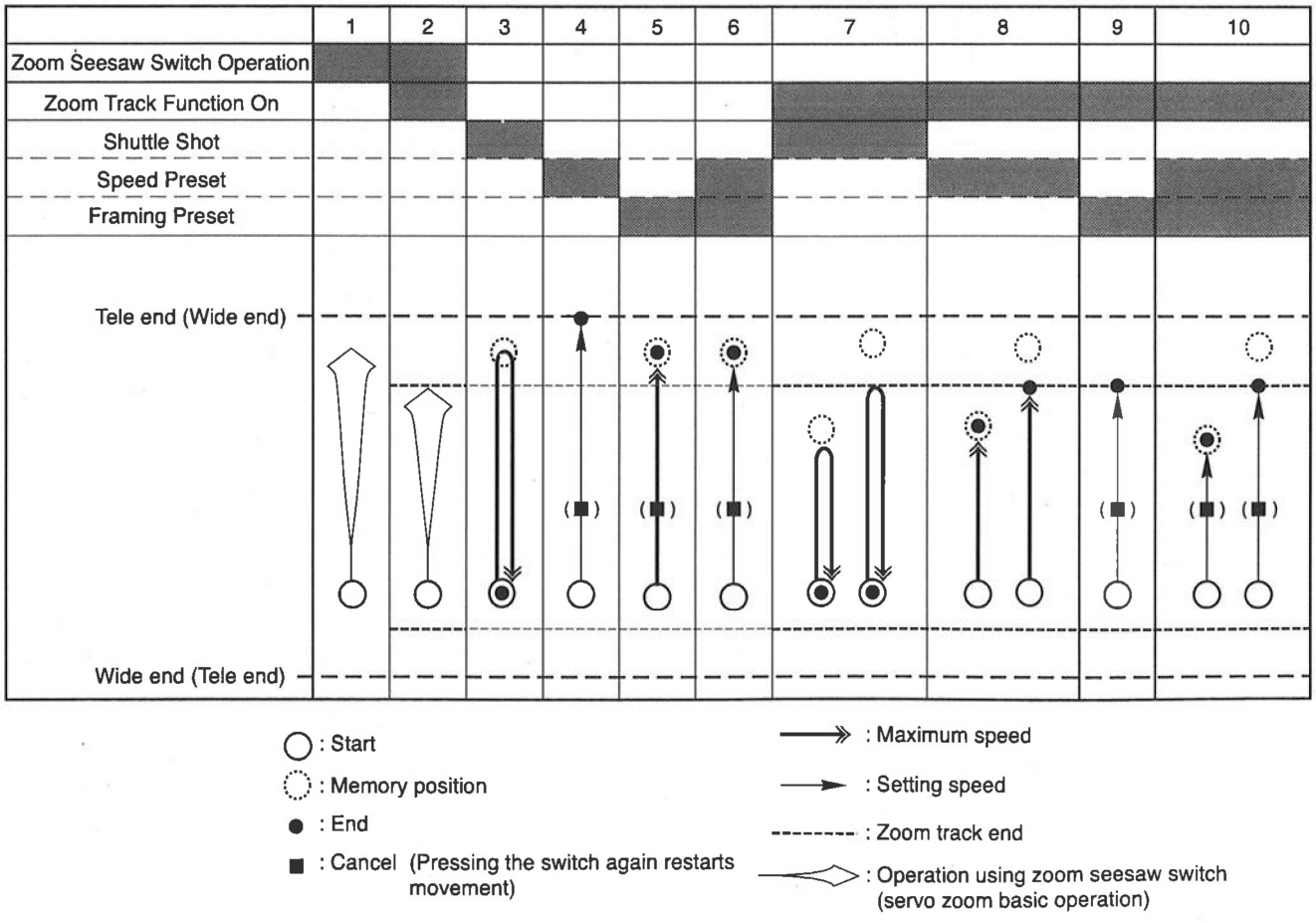

IMPORTANT

Set the zoom operation change-over knob at the bottom of the drive unit to the SERVO position. (See Fig. 2-3 below.)

Servo zoom operation is not possible if the knob is left at the MANU. position.

For a smooth change, turn the change-over knob while rotating the zoom ring slightly.

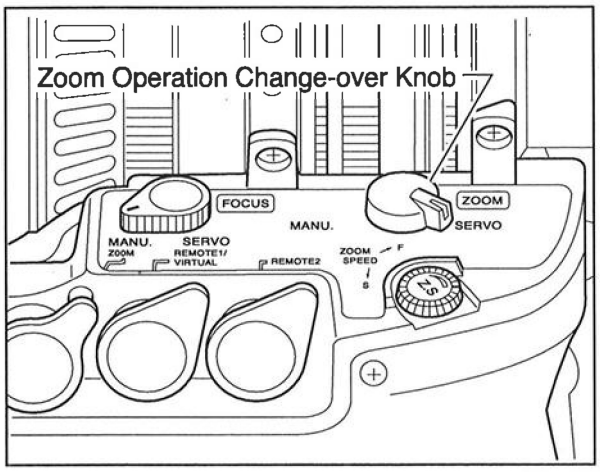

Fig. 2-3

1) Zoom Seesaw Switch Operation

This is the most basic and simplest method for servo zoom operation for performing zoom operation to a selected position at a selected speed by pressing the zoom seesaw switch.
The zoom operation can be performed by pressing the zoom seesaw switch.

Operation direction	Zoom direction
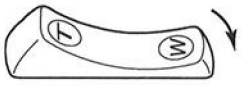	Wide end
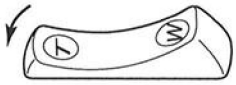	Tele end

The amount that the switch is pressed determines zoom speed. Pressing the switch farther down will increase the zooming speed.

*(NOTE): When the zoom track function is set to ON, this setting zoom position may not allow servo zoom to be performed up to the zoom end where the lens is located.

■ Maximum zoom speed volume

The servo zoom speed when the zoom seesaw switch is pressed varies according to how much the switch is pressed down. Pressing the switch farther down makes the speed faster.

The speed when this switch is pressed all the way is the maximum zoom speed.
The maximum zoom speed can be adjusted using the maximum zoom speed volume.

This also adjusts the speed over the entire range that the switch is pressed down. (See the below.)

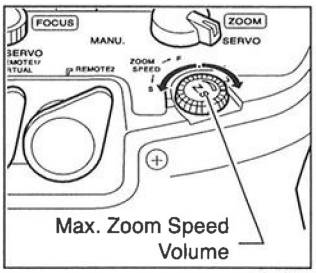

Fig. 2-4

Reference: Maximum zoom speed image graph

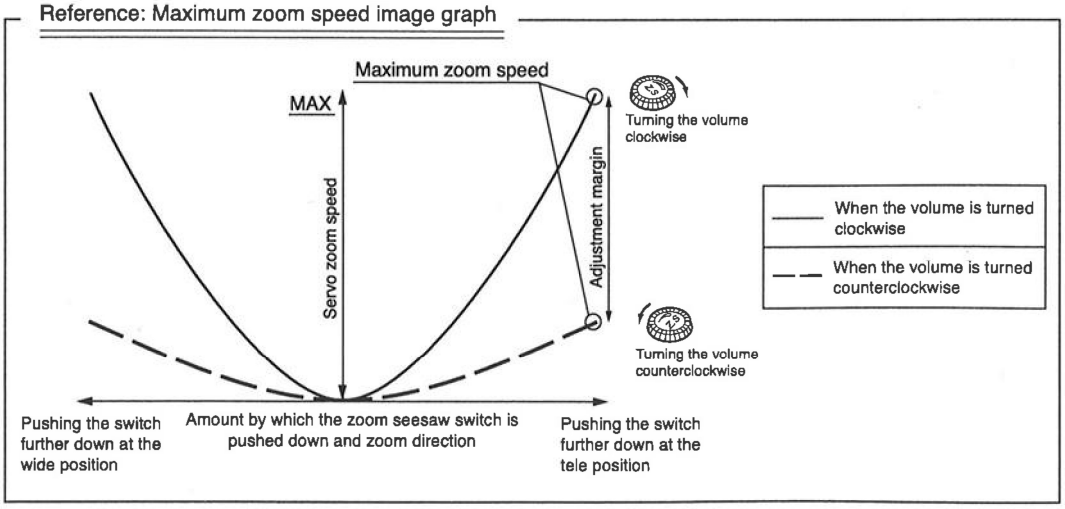

*(NOTE): The maximum speed in servo zoom automatic playback operation is always set at the highest speed regardless of the adjustment setting of the maximum zoom speed volume.

■ Zoom speed characteristics

The characteristics of the zoom speed, which is established in response to the amount by which the zoom seesaw switch is pushed down, can be changed on the information display.

A simple method which can be used to set these characteristics is described here. For further details, refer to page E2-12 in the Information Display Manual.

Setting the curve characteristics of the zoom seesaw switch

1. Push the DISPLAY switch to turn on the display.
2. Select [Z.M.] using the control key, and then push the Set key. The display is switched to the [CurveMode] screen. (Fig. 2-5)
3. Move the down key to select [Seesaw]. Then move the left or right key until the numerical value to be changed to appears on the display.
4. Push the Set key. This completes the setting.

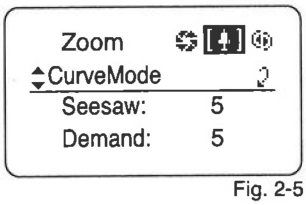

Fig. 2-5

Reference: Zoom speed characteristics image graph

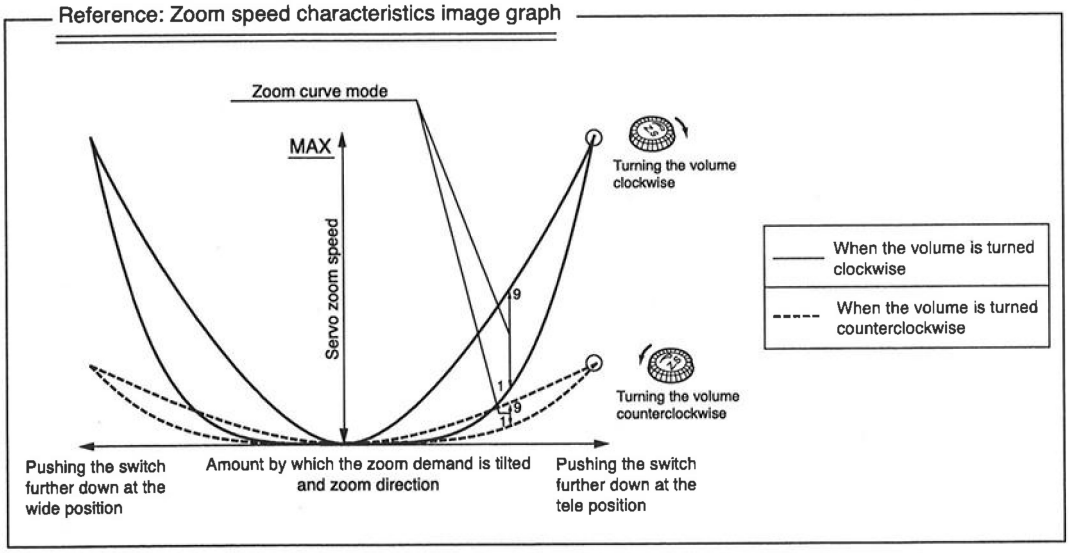

*(NOTE): The maximum speed in servo zoom automatic playback operation is always set at the highest speed regardless of the adjustment setting of the maximum zoom speed volume.

■ Movement function

The drive motor is activated by the zoom operations, and the following characteristics during operation can be set.

Start ..... Start characteristics
Stop ..... Stop characteristics
End ..... Mechanism end stop characteristics

A simple method which can be used to set these characteristics is described here. For further details, refer to page E3-54 to 56 in the Information Display Manual.

Setting the Start, Stop and End characteristics

1. Push the DISPLAY switch to turn on the display.
2. Push the Set key, and use the right key to display the Zoom screen. (See Fig. 2-6)
3. Move the down key three times, and push the Set key. The display is switched to the Movement screen. (See Fig. 2-7)
4. Move the down key to select the [Start], [Stop] or [End] item which is to be set.
5. Move the left or right key until the numerical value to be changed to appears on the display.
6. Push the Set key. This completes the setting.

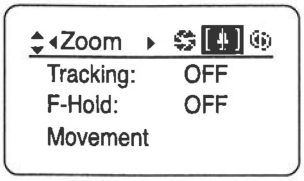

Fig. 2-6

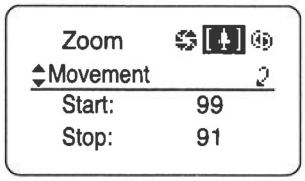

Fig. 2-7

■ F-Hold function

As a regular zoom lens is turned toward the telephoto end, the f-number decreases. This phenomenon is referred to as F drop. The F-Hold function has been provided in order to enable zoom operations to be performed only within the range of the focal length where this F drop does not occur.

The settings are performed on the information display, and a simple method which can be used to set this function is described here. For further details, refer to page E3-53 in the Information Display Manual.

Reference: Zoom lens F drop

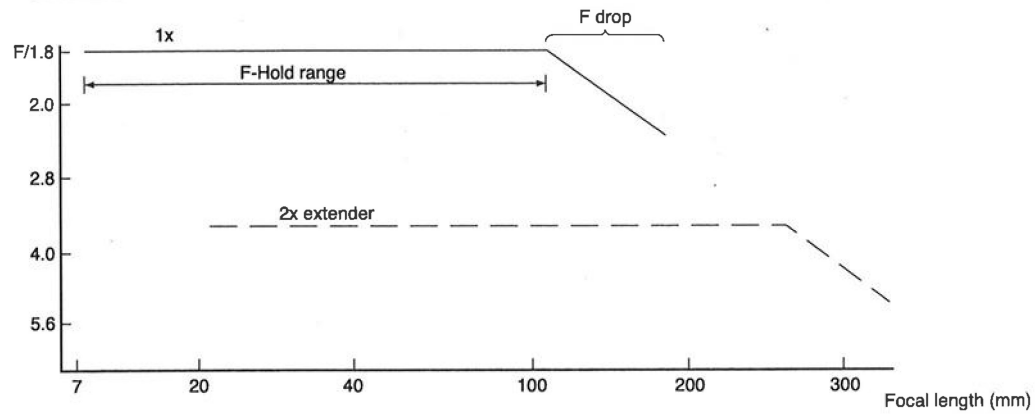

Setting F-Hold (default setting: "OFF")

1. Push the DISPLAY switch to turn on the display.
2. Push the Set key, and use the right key to display the Zoom screen. (See Fig. 2-8)
3. Move the down key twice, and move the left or right key to select ON or OFF.
4. Push the DISPLAY key. This completes the setting.

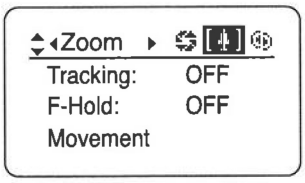

Fig. 2-8

When F-Hold is ON

* (NOTES): 1) The shuttle function is adversely affected.
2) If the current zoom position is outside the F-Hold range, the zoom automatically moves to a position immediately before the F drop.
3) When the extender has been switched or the power has been turned off, the function is released.

*(NOTE): When Iris is set as Auto, F-Hold can not be set on.

2) Zoom Track Function

The zoom control range (zoom track) can be limited to selected zoom positions.

This function allows virtual settings to be made for the Tele end and Wide end. The zoom track function is enabled for all servo zoom operations. (This does not affect manual zoom operation.)

The first step which must be taken if the zoom track function is to be used is to set the function to ON. There are two ways to set this function to ON or OFF. Refer to the following page for the setting method.

■ Setting the zoom track function to "ON" or "OFF"

A: Setting "ON" or "OFF" on the information display

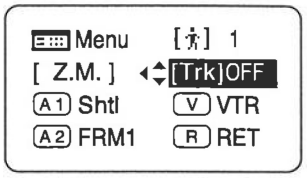

Fig. 2-9

1. Push the DISPLAY switch to turn on the display.
2. Select [Trk] using the control key, and then push the Set key. [Trk] and the last setting now blink on the display. (Fig. 2-9)
3. Move the left or right key to select ON or OFF.
4. Push the Set key. This completes the setting.

For information on the more detailed settings, refer to page E2-14 in the Information Display Manual.

B: Setting "ON" or "OFF" by operating the switches

The zoom track function can be set to ON or OFF by operating the switch as shown below.

	Selection method	Operation	How to ascertain the selection
To set the function to "ON"	Hold down the Memo switch and iris A/M switch simultaneously for at least 3 seconds. (See Fig. 2-10)	The zoom control range is fixed to the zoom range set last. (If there is no previous setting, it is set to the mechanism end point.)	Automatic zooming from current zoom position to the closer of the two set positions.
To set the function to "OFF"		The zoom range is set to the mechanism end point.	Automatic zooming from current zoom position to the closer of the two mechanism end point positions.

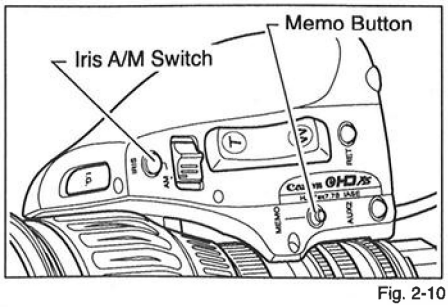

Fig. 2-10

■ Setting the zoom track positions

The first step which must be taken if the zoom track position is to be set is to set the function to ON. To set this function to ON or OFF, refer to the previous page.

1. Zoom to the zoom track position that you want to set.

2. While holding this zoom position, press the iris A/M switch while holding down the Memo button. If the zoom position is at the Tele end with respect to the center position of the zoom range for this lens, the position is stored as the zoom track position for the Tele end. If the position is at the Wide end, it is stored as the zoom track position for the Wide end.

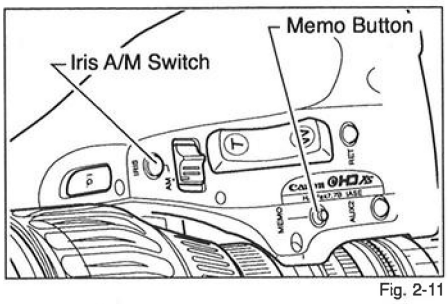

Fig. 2-11

3. Steps 1 and 2 are repeated to make the setting for both the Tele and Wide ends. It is also possible to make the setting for only one end.

4. To reset the zoom track position, perform steps 1 to 3 again. (The position setting that is made last overwrites the setting in the memory.)

* (NOTE): 1) If the zoom track position is to be set again, the zoom position cannot move beyond the end point setting toward the mechanical end side by performing servo zoom operations. To move the zoom, take one of the steps below.
  - Set the zoom track function to OFF. (See previous page)
  - Proceed with the zooming operation at the setting established by operating the zoom seesaw switch (see page E2-5).
  - Perform the zooming operation manually.

  2) Although up to two zoom track positions (Tele end and Wide end) can be set, two positions cannot be set that are on the same side of the center position of the zoom range of this lens. (In this case, the setting that was made last is stored as the zoom track position of this side.)

Reference: Illustrated example of zoom track function operation

Operation	When making the Wide end setting after the Tele end setting	Setting the function from ON to OFF	Setting the function from OFF to ON
Button operation	"Memo" Iris A/M ⇨ Zooming ⇨ "Memo" Iris A/M	"Memo" + 3 sec. ... Iris A/M	"Memo" + 3 sec. ... Iris A/M
Flow of operations	⇨ Tele end setting ⇨ ⇨ Wide end setting	Function ON ⇨ Function OFF	Function OFF ⇨ Function ON

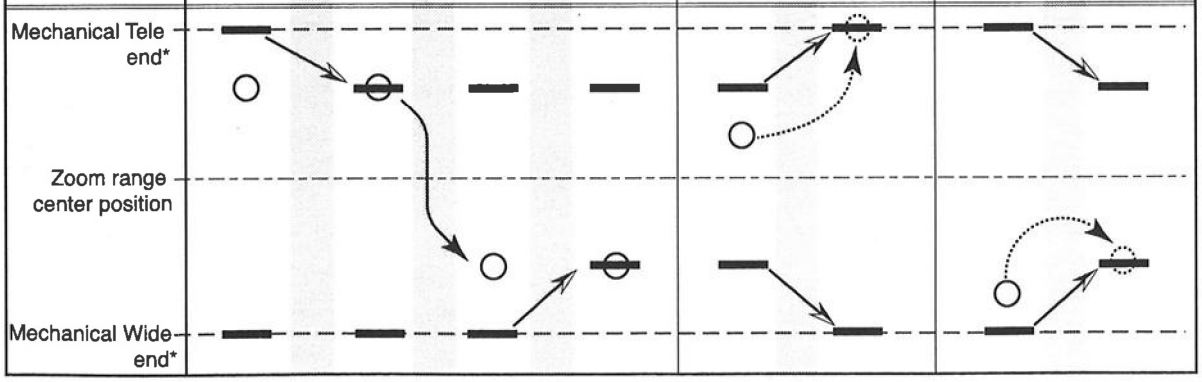

* Mechanical Wide end and mechanical Tele end: Zoom range end positions of this lens

○ : Current zoom position
◌ : Zoom position after ON/OFF is completed
▬ : End position setting
⟶ : Manual zooming
⇢ : Automatic zooming
⟶ : End position setting is moved

Concerning operations using the zoom demand

Servo zoom operations can also be performed using the zoom demand. For details on the connections and operation, refer to the Zoom Demand Manual.
When the zoom demand is to be used, it is absolutely necessary to perform or check the four settings described below.

■ 1. Setting the zoom demand specifications

The zoom demand has two VTR switch models: M(momentary) and A(alternate), and select the switch setting that matches the zoom demand which will be used. The settings are performed on the information display. The default setting is 300M.

Select either:

- Momentary zoom demand ... 300M (ZSD-300M, ZSD-300D, etc.)
- Alternate zoom demand ... 300A (ZSD-300A, etc.)

The setting method is described below.

1. Push the DISPLAY switch to turn on the display.
2. Push the Set key, and push the right key to display the Zoom screen. (See Fig. 2-12)
3. Move the down key eight times, and move the left or right key to select 300M or 300A.
4. Push the DISPLAY key. This completes the setting.

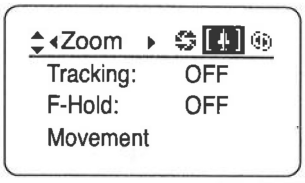

Fig. 2-12

* (NOTE): The camera will not be controlled properly unless this setting is correct.

■ 2. Setting whether to enable or disable the operation of the maximum zoom speed volume for the zoom demand

The maximum zoom speed volume can be set to enabled (ON) or disabled (OFF) for the zoom demand. The settings are performed on the information display. The default setting is enable.

Select either:

Enable ---------- ON
Disable ---------- OFF

The setting method is described below.

1. Push the DISPLAY switch to turn on the display.
2. Push the Set key, and move the right key to display the Zoom screen. (See Fig. 2-12)
3. Move the down key seven times, and move the left key or right key to select ON or OFF.
4. Push the DISPLAY key. This completes the setting.

■ 3. Zoom speed characteristics

The characteristics of the zoom speed, which is established in response to the amount by which the zoom demand is tilted, can be changed on the information display.

A simple method which can be used to set these characteristics is described here. For further details, refer to page E3-58 in the Information Display Manual.

Setting the curve characteristics of the zoom demand

1. Push the DISPLAY switch to turn on the display.
2. Select [Z.M.] using the control key, and then push the Set key. The display is switched to the [CurveMode] screen. (Fig. 2-13)
3. Move the down key to select [Demand]. Then move the left or right key until the numerical value to be changed to appears on the display.
4. Push the Set key. This completes the setting.

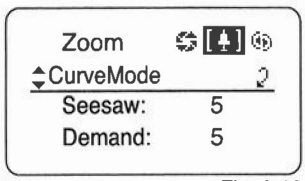

Fig. 2-13

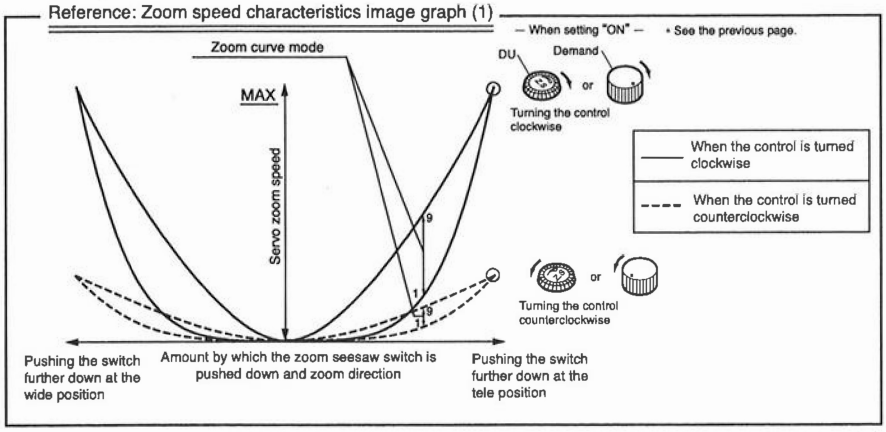

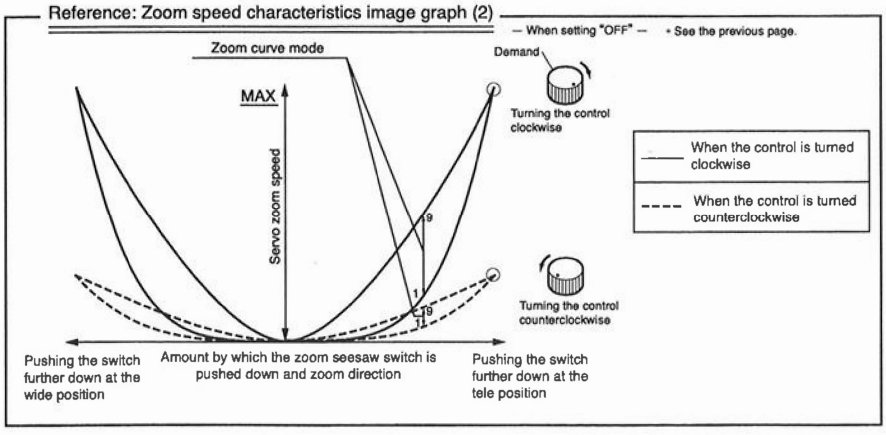

*(NOTE): The maximum speed in servo zoom automatic playback operation is always set at the highest speed regardless of the adjustment setting of the maximum zoom speed volume.

■ 4. Setting the servo system from the zoom demand

Either the speed servo or position servo can be set as the servo system from the zoom demand. The settings are performed on the information display. The speed servo has been set as the default.

Select either:

For the speed servo -------- Sped
For the position servo ----- Posi

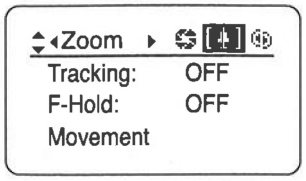

Fig. 2-14

The setting method is described below.

1. Push the DISPLAY switch to turn on the display.

2. Push the Set key, and move the right key to display the Zoom screen. (See Fig. 2-14)

3. Move the down key six times, and move the left or right key to select Sped or Posi.

4. Push the DISPLAY key. This completes the setting.

*(NOTES): 1) Normally, Sped is selected.
2) When Posi has been selected, the seesaw switch can no longer be used.
3) When Posi has been selected, only one demand connector can be connected.

3. FOCUS OPERATION

(The illustrations included in this manual may differ slightly in shape for each model. The operation methods, however, are identical.)

The basic focus operation for this lens is the manual focus operation where the focus ring is turned by hand.

A type lenses, however, have a built-in motor for driving the focus, and connecting a focus positional servo demand (sold separately) allows servo focus operation.
For more information about accessories sold separately, see section 9, "OPTIONAL ACCESSORIES."

MANUAL FOCUS OPERATION

1. Set the focus operation change-over knob at the bottom of the drive unit having only an A type lens to the MANU. position. (R type lenses do not have this knob.)

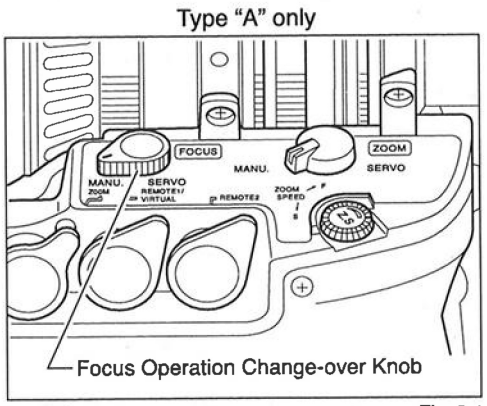

Fig. 3-1

⚠ CAUTION: When using the A type lens, the camera can be damaged if excessive force is used to try to turn the focus ring when the knob is left in the SERVO position.

2. Turn the focus ring to focus on the subject at the Near end or Far end based on the rotation directions below.

Directions as viewed from the camera side
- Clockwise direction ---------- Near end
- Counterclockwise direction ------ Far end

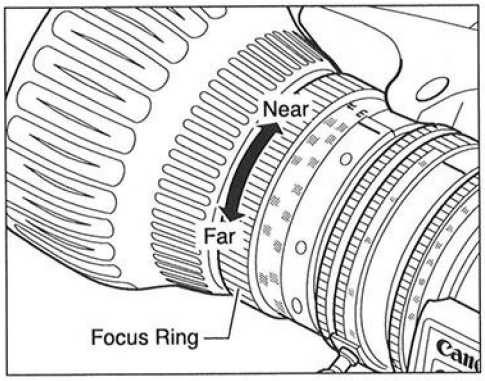

Fig. 3-2

SERVO FOCUS OPERATION ("A" TYPE LENSES ONLY)

In A type lenses, connecting a focus positional servo demand (sold separately) enables servo focus operation.

For the servo focus operating procedures, refer to the operation manual of the focus positional servo demand.

Before starting the servo focus operation

IMPORTANT

Before starting the servo focus operation, the focus operation change-over knob on the bottom of the drive unit must be set to SERVO without fail. (See Fig. 3-3.) Servo focus operations cannot be performed if this knob is kept at the MANU. setting.

Type "A" only

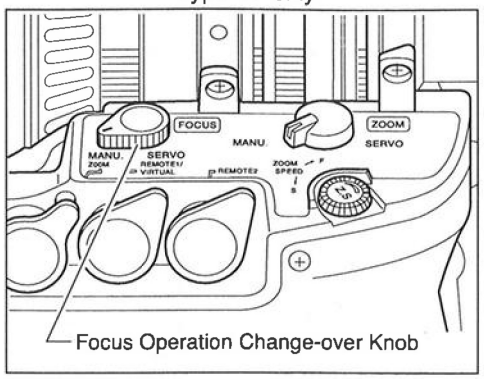

Fig. 3-3

■ Setting the focus demand curve characteristics

The curve characteristics can be set for the positions of the focus demand knob.

1. Push the DISPLAY switch to turn on the display.
2. Push the Set key, and move the left key three times to display the Focus screen. (See Fig. 3-4)
3. Move the down key to select [CurveMode], and then push the Set key.
4. Move the down key to select [ADemand], and then move the left or right key until the numerical value to be changed to appears on the display.
5. Push the Set key. This completes the setting.

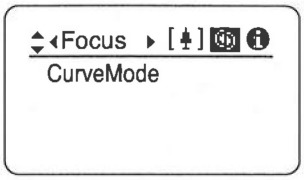

Fig. 3-4

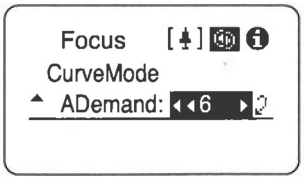

Fig. 3-5

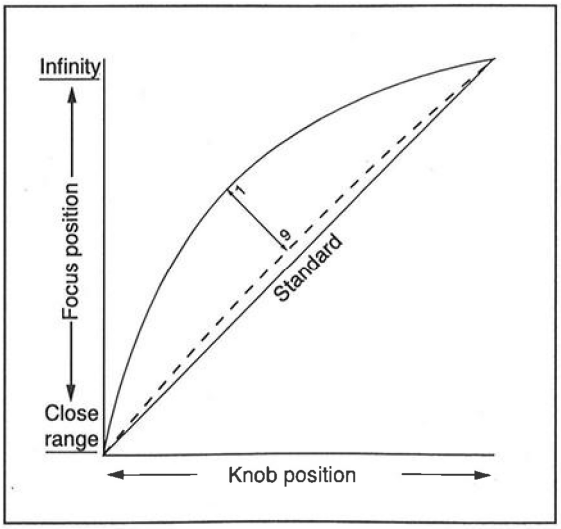

* (NOTE): The focus demand has a curve selector switch, and these operations take effect when the switch has been set to FAR.

4. IRIS OPERATION

(The illustrations included in this manual may differ slightly in shape for each model. The operation methods, however, are identical.)

The iris operations of this lens generally uses the methods described below. Use the suitable procedure according to your usage conditions.

■ Types of iris operation

• Manual operation ---------- This is the most basic method where the user turns the iris ring by hand.

• Automatic operation ---------- Automatic iris operation based on camera command signals

In addition, there is a momentary auto-iris function which establishes the auto setting only while the switch is pushed when the manual iris operation is selected.

MANUAL IRIS OPERATION

The operating procedures described below assume that the switches are still at the positions which were set at the factory. If switch settings have been performed on the information display, refer to the Table 4-4 (Correlation between iris A/M switch settings and operations) on the next page.

1. Slide the iris A/M switch to the M position.

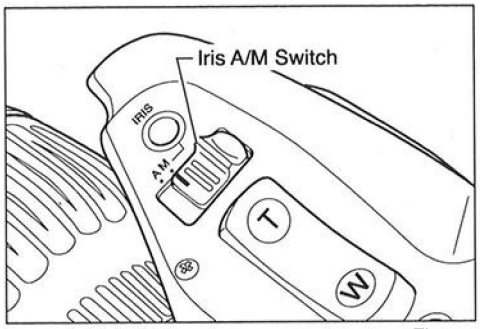

Fig. 4-1

2. The iris is adjusted by turning the iris ring based on the rotation directions below.

Directions as viewed from the camera side

- Clockwise direction ---------- The iris becomes smaller, and the video level becomes lower.
- Counterclockwise direction ------ The iris becomes larger, and the video level becomes higher.

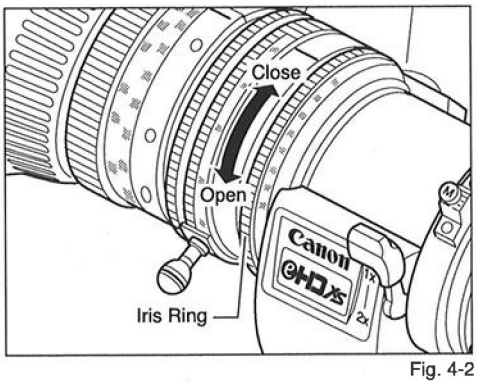

Fig. 4-2

■ Momentary auto-iris operation

When the momentary auto-iris switch is pressed during manual iris operation mode, the iris changes to automatic operation mode while the switch is held down. This feature is helpful when the correct iris setting is required momentarily.

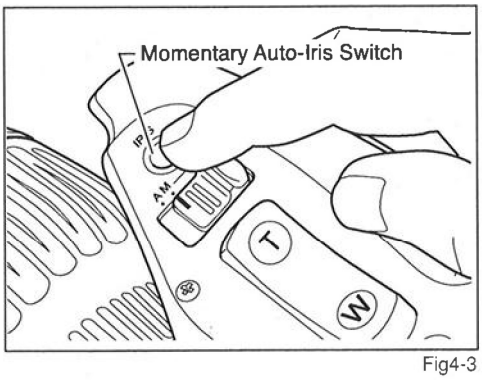

Fig4-3

* (NOTE): When the iris A/M switch setting has been changed to Manual on the information display, the momentary auto-iris function will not work. (See the page E4-4)

AUTOMATIC IRIS OPERATION

1. Check that the iris mode of the camera is set to Auto (automatic). (Refer to the camera operation manual for the camera operating procedures.)

2. Set the iris A/M switch to the A (Auto) position. The Auto Iris mode is set.

   The motor built into the lens rotates the iris ring automatically based on command signals from the camera so that the video signal is kept at a constant level.

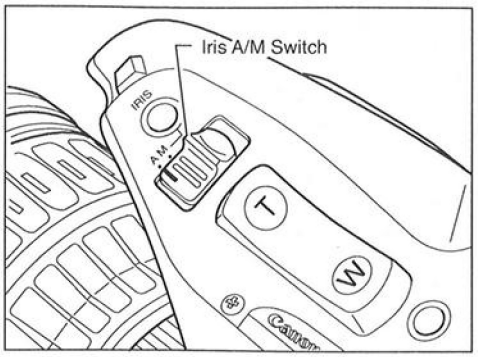

Fig. 4-4

■ Iris A/M switch settings

The operation of the iris A/M switch can be changed on the information display.

Four settings are provided: Normal, Reverse, Auto and Manual. The meaning of each setting and the correlation between the settings and operations are shown in the table below.

Table 4-1 Correlation between the settings and operations of the iris A/M switch

Setting	Meaning of setting	Iris A/M switch position	
		For auto operations	For manual operations
Normal	When "A" is selected: Only auto iris operations take effect. When "M" is selected: Only manual iris operations take effect.		
Reverse	Operations which are the reverse of the "Normal" operations		
Auto	Only auto iris operations take effect.	Either position may be used.	
Manual	Only manual iris operations take effect.	Either position may be used.	

The settings are performed on the information display. A simple setting method is described here. For information on the detailed settings, refer to page E2-28 in the Information Display Manual.

Setting the iris A/M switch (default setting: "Normal")

1. Push the DISPLAY switch to turn on the display.
2. After selecting [AM] using the control key, push the Set key. [AM] and the default or last setting now blink on the display. (Fig. 4-5)
3. Move the left or right key until the function to be changed to appears on the display.
4. Push the Set key. This completes the setting.

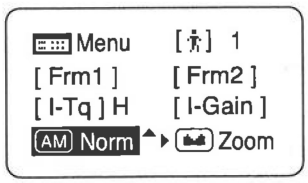

Fig. 4-5

5. SWITCH OPERATIONS, FUNCTIONS AND SETTINGS

(The illustrations included in this manual may differ slightly in shape for each model. The operation methods, however, are identical.)

Four of the switches provided on the lens VTR, RET, AUX1 and AUX2 had the functions of VTR, RET, Shtl and FRM1 respectively allocated to them at the factory.

Alternative functions can be allocated to these switches to suit the ways in which the switches will be used.

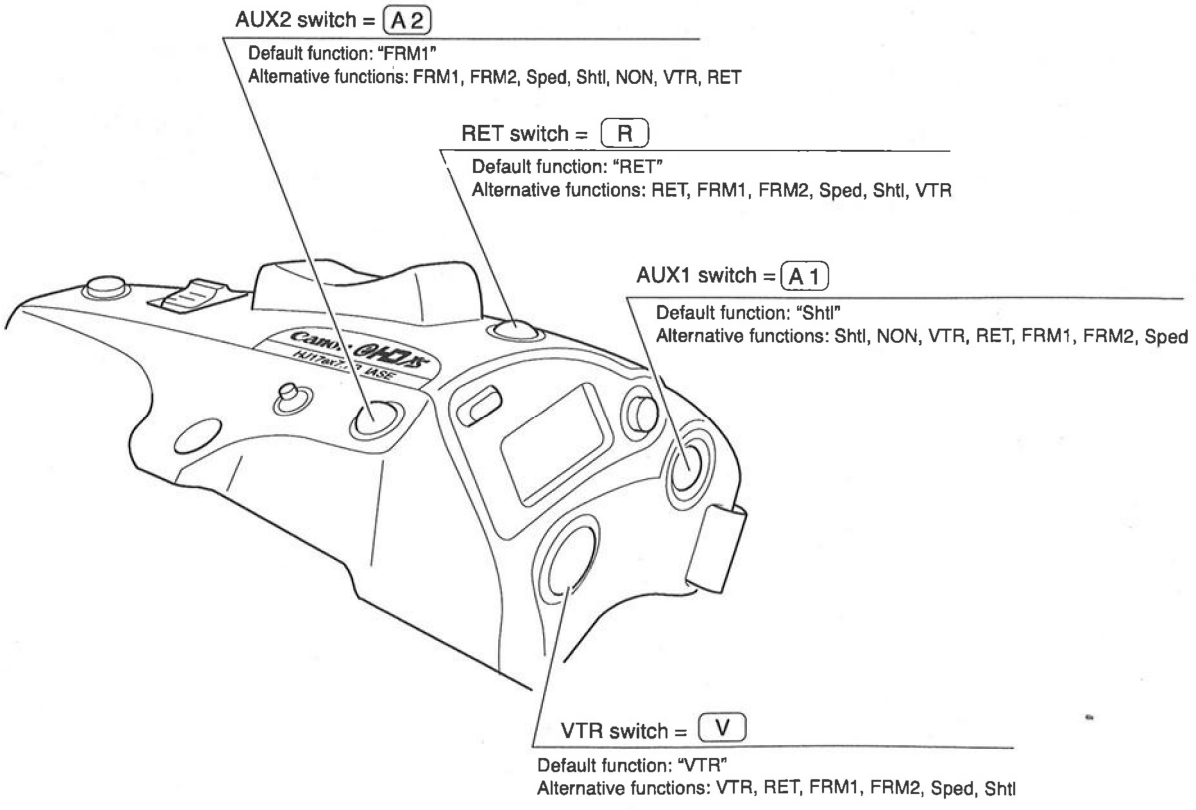

ALLOCATING THE FUNCTIONS TO THE SWITCHES

The functions allocated to the switches can be changed on the information display. The selectable items and brief descriptions of the functions are provided in the table below.

Selectable item	Brief description of functions	Page where function or operation is described
VTR	The switch to which the "VTR" function has been allocated allows the VTR to start and stop.	Page E5-3
RET	The return video is shown on the viewfinder while the switch to which the "RET" function has been allocated is held down.	
FRM1	The zoom or focus moves to the zoom or focus position stored in the memory by pushing the switch to which the "FRM1" or "FRM2" function has been allocated. Memory and playback are possible at one position each for "FRM1" and "FRM2."	Page E6-1 6. Servo zoom automatic playback operation
FRM2		
Sped	The zoom moves at the zoom speed and in the zoom direction (telephoto or wide end) stored in the memory by pushing the switch to which the "Sped" function has been allocated.	
Shtl	The zoom moves at the maximum speed to the zoom position stored in the memory by pushing the switch to which the "Shtl" function has been allocated. When the switch is released, it returns at the maximum speed to the original zoom position.	
NON	No function	

The allocation of the functions is changed on the information display. A simple method for changing the allocation is described here. For information on the detailed procedure, refer to pages E2-15 to E2-18 in the Information Display Manual.

Allocating the functions to the switches

1. Push the DISPLAY switch to turn on the display.
2. After using the control key to select the name of the switch key to which the function is to be allocated, push the Set key. The name of the switch and the default or last setting now blink on the display. (Fig. 5-1)
3. Move the left or right key until the function to be changed to appears on the display.
4. Push the Set key. This completes the setting.

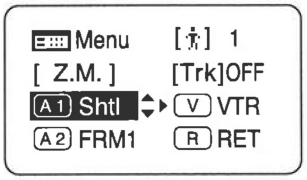

Fig. 5-1

VTR Switch Function and Operation

Press the VTR switch to execute the operation of VTR and press it again to stop the operation of VTR.

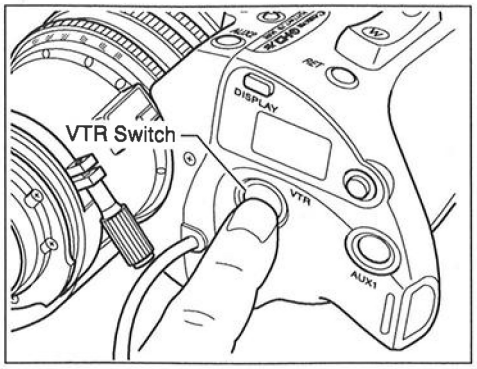

Fig. 5-2

* (NOTE):	At the factory, the VTR function is allocated to the VTR switch, but another function can be allocated instead on the information display. If another function has been allocated, refer to the page on which the operation of the allocated function is described.

RET Switch Function and Operation

While the RET switch is pressed, the return video can be seen on the viewfinder.

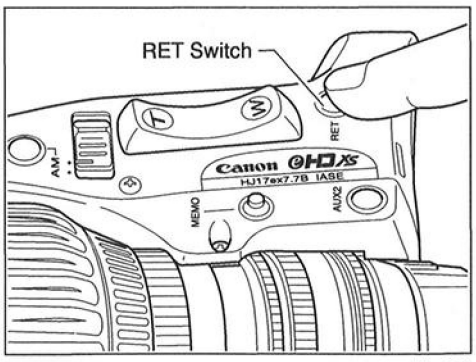

Fig. 5-3

* (NOTE):	At the factory, the RET function is allocated to the RET switch, but another function can be allocated instead on the information display. If another function has been allocated, refer to the page on which the operation of the allocated function is described.

6. SERVO ZOOM AUTOMATIC PLAYBACK OPERATION

(The illustrations included in this manual may differ slightly in shape for each model. The operation methods, however, are identical.)

In addition to the basic servo zoom operation using the zoom seesaw switch, the servo zoom automatic playback operation are provided.

* (NOTE):	The zoom track function is activated under the environment for the servo zoom automatic playback operation. Therefore, if the function is turned on, zooming may not be possible up to the memory positions (shuttle and framing memory positions) or zoom end (speed preset). Turn the zoom track function on or off as necessary.

■ Types of servo zoom automatic playback operations

The following function can be set for each users.

(1) Shuttle Shot ---------- This function is useful when you frequently switch between two zoom positions.

(2) Speed Preset ---------- Any desired specific zoom speed can be preset in memory, and it is possible to repeat that speed as often as you like.

(3) Framing Preset --------- This function allows you to easily reproduce a specific angle of field and zoom speed which were determined at rehearsal shooting.

The operations above are the three main ones, but each of them can also be performed in combination with the zoom track function which was described earlier.

SERVO ZOOM OPERATION-Variation Image

: Type of servo zoom that is operated

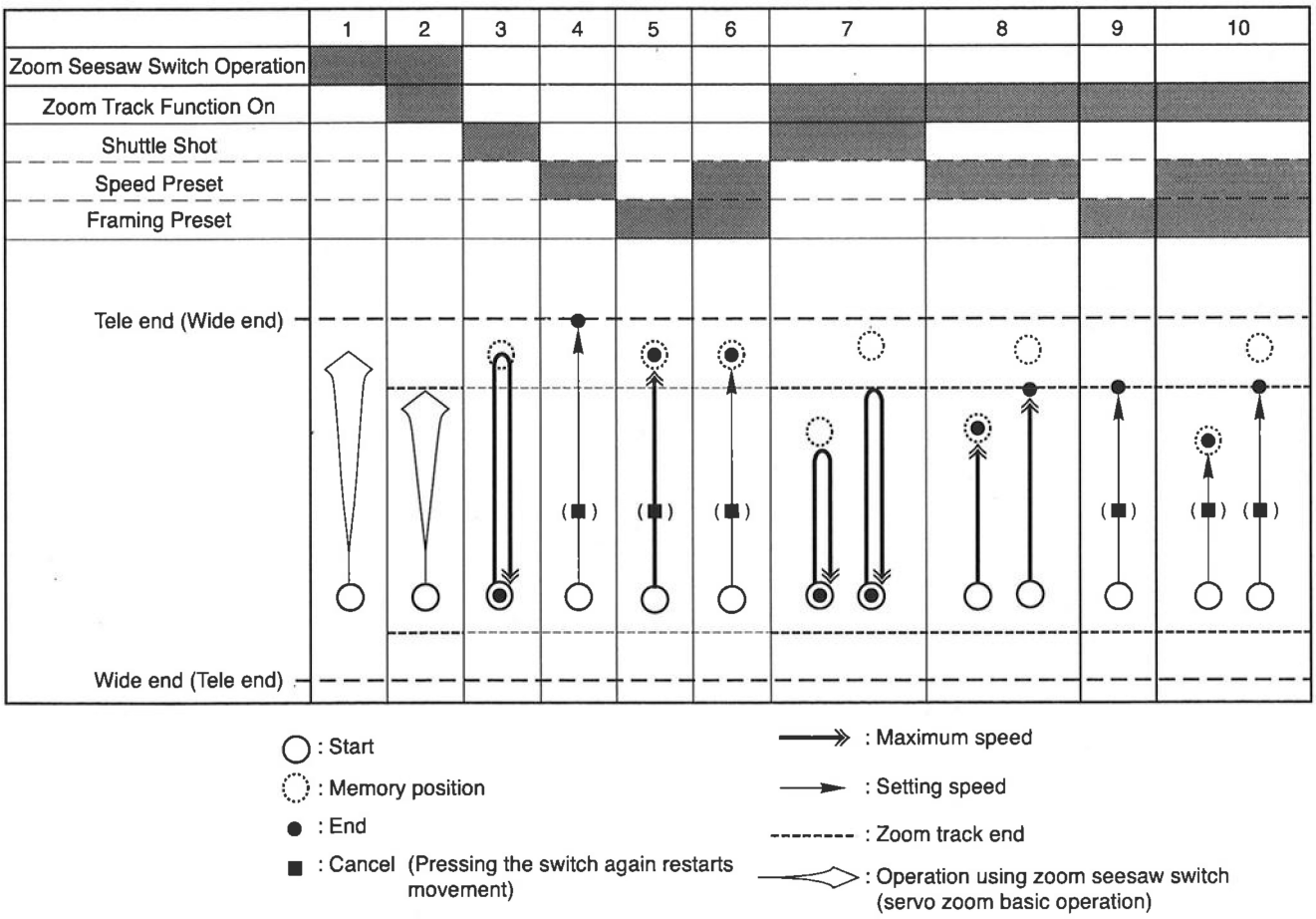

○ : Start

◌ : Memory position

● : End

■ : Cancel (Pressing the switch again restarts movement)

⟹ : Maximum speed

→ : Setting speed

-------- : Zoom track end

⟹ : Operation using zoom seesaw switch (servo zoom basic operation)

(1) SHUTTLE SHOT

* (NOTE): The illustrations show that the AUX1 switch still has the function (Shtl) which was allocated at the factory. Bear in mind, however, that if Shtl has been allocated to another switch by following the function allocation procedure, there will be a discrepancy between what is shown in the illustrations and the actual statuses of the switches.

1. How to store the shuttle memory position

Zoom to the selected position that you want to store, while holding the zoom position, press the Shtl button while holding down the Memo button. This stores the shuttle memory position.

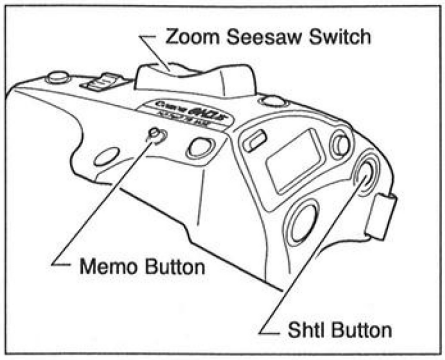

Fig. 6-1

*(NOTE): This shuttle memory position is different from the framing preset memory position (Refer to Framing Preset). The stored zoom position remains in the memory, even after the power is turned off.

2. How to move to the shuttle memory position

When holding down the Shtl button, the zoom moves toward the shuttle memory position at the maximum speed, and stops at the shuttle memory position (preset zoom position).
So long as the Shtl button is held down, the zoom stays at the shuttle memory position.

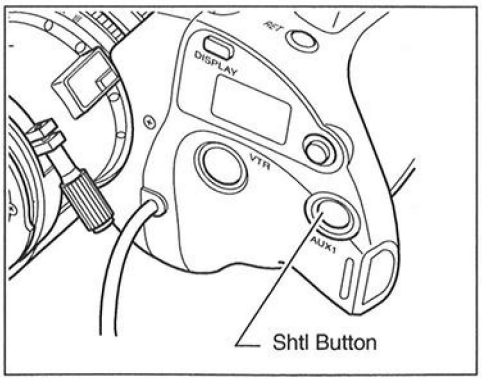

Fig. 6-2

*(NOTE): Since operation with the Shtl button is given priority, operation cannot be performed with the zoom seesow switch while the Shtl button is held down.

3. How to return to the original position

When the Shtl button is released, the zoom returns automatically to the original position at the maximum speed, or the zoom operation with the zoom seesaw switch can be performed immediately.

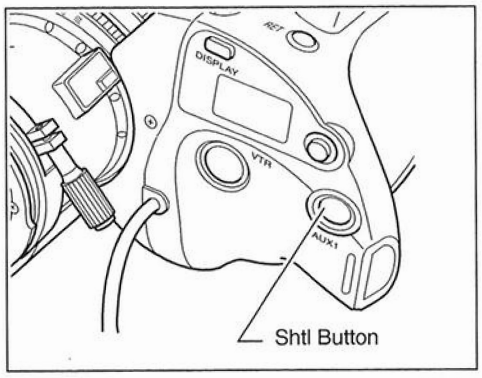

Fig. 6-3

4. How to renew the original position

The original position does not change when the zoom operation is repeated using only the Shtl button. (Using a zoom operation other than zoom with the Shtl button, however, will change the original position each time that it is used.)
In other words, once the finger is released, the original position is the zoom position at the moment that the Shtl button is pressed and Shuttle Shot is started.

(1) Shuttle Shot Operation Diagrams

(Example)

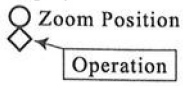

● Basic Movement of the Shuttle Shot Operation

- While the {Shtl} button is held down, the zoom moves toward the shuttle memory position (preset zoom position) at the maximum speed. Once the zoom reaches to this point, the zoom stops and stays there, so long as the {Shtl} button is held down.



- When the {Shtl} button is released, the zoom returns automatically to the original position.

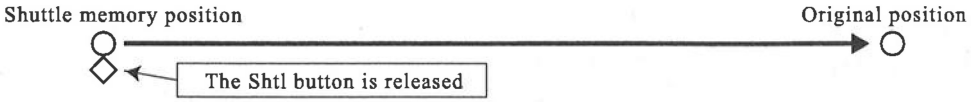

● Other

Either of the following operations cancels the zoom movement to the shuttle memory position.

- Releasing the {Shtl} button prior to reaching the memory position returns the zoom to the original position.

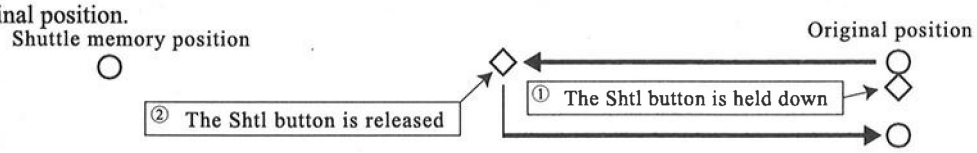

- When the {Shtl} button is released, the zoom operation (with the zoom seesaw switch for example) can be performed. However, since the priority is given to the Shtl shot operation, other zoom operations can not be performed while pressing the Shtl button.

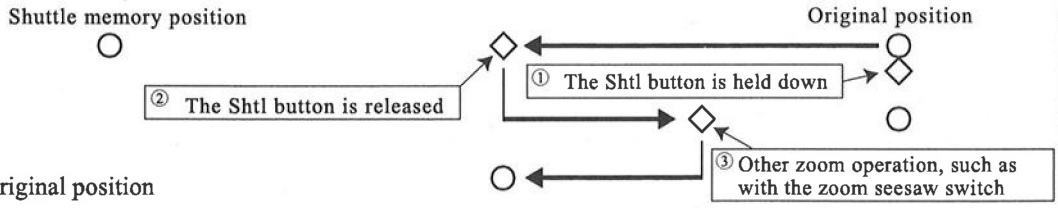

- The original position remains unchanged, so long as the zoom operation is only performed by the {Shtl} button.

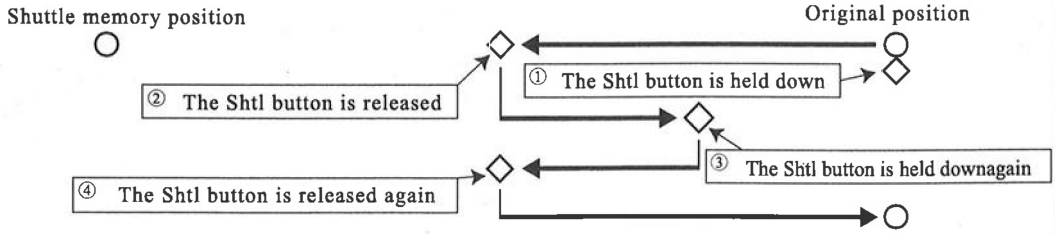

- The original position is changed whenever the zoom operation is performed by any other means than the {Shtl} button.

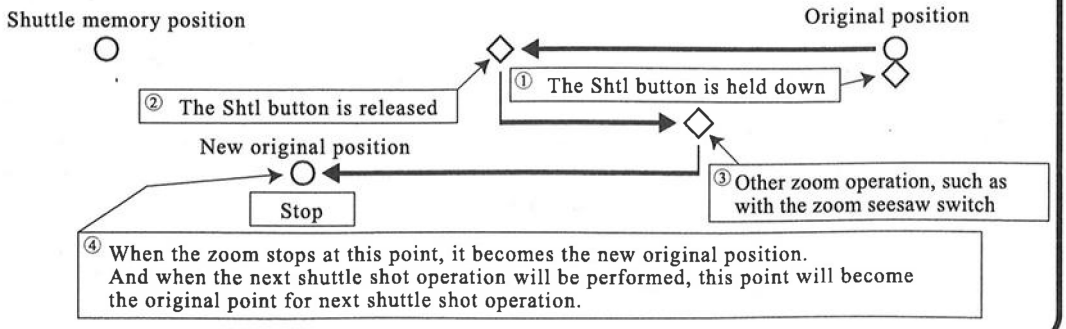

(2) SPEED PRESET

Allocate the Sped function to VTR, RET, AUX1 or AUX2 switch. In this manual, operations are described on the assumption that Sped function was allocated to the VTR switch.

Concerning the illustrations

* (NOTE): The illustrations show the switches with the functions below allocated to them. Bear in mind, however, that if these functions have been allocated to other switches, there will be a discrepancy between what is shown in the illustrations and the actual statuses of the switches.

1) Sped function ... This is allocated to the VTR switch.
2) Shtl function ... This is allocated to the AUX1 switch (factory setting).
3) FRM1 function ... This is allocated to the AUX2 switch (factory setting).

1. How to preset the zoom speed and direction

Operate the zoom seesaw switch to determine the zoom speed and direction (towards tele end or wide end) which you want to store, and press the memo button. The zoom speed and direction are stored.

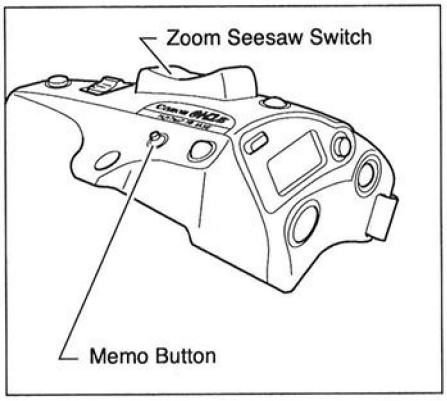

Fig. 6-4

* (NOTE): The stored zoom speed is applied to the (3) framing preset.

2. How to operate the speed preset function

When the Sped button is pressed, the zoom starts to move at the preset speed and to the determined direction (towards tele end or wide end) stored in section 1 until the zoom reaches its end.

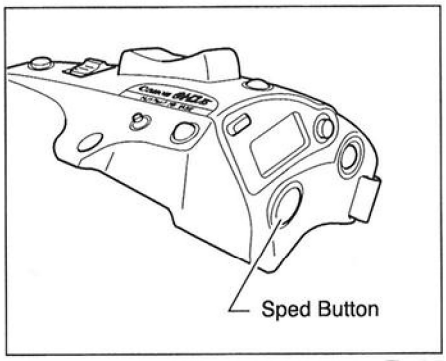

Fig. 6-5

*(NOTE) : When the switch is once pressed, the zoom moves to its end, and stays there. It is not necessary to holding down the switch as for the (1) Shuttle Shot.

3. How to cancel movement in Speed Preset or switch to other operations

Movement in Speed Preset can be canceled by any of the following operations.

- Pressing the Sped button again stops zoom movement.
- Performing zoom operation with the zoom seesaw switch.
- Performing zoom operation with the Shtl button.
- Performing zoom operation with the FRM1 button.

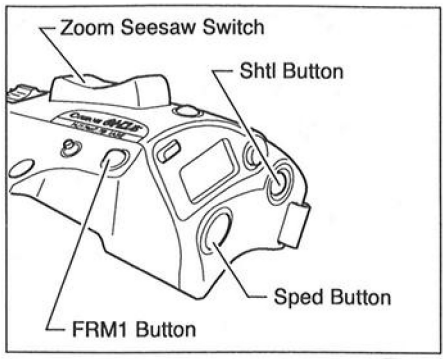

Fig. 6-6

(2) Speed Preset Operation Diagrams

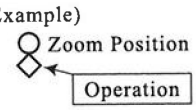

● Speed Preset Function

- When the {Sped} button is pressed, the zoom starts to move at the preset speed and to the determined direction and stops at the zoom end. (either narrow angle end or wide angle end).

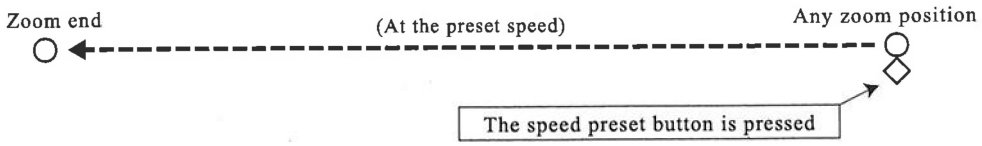

● Other

The following operations cancel the zoom movement by the speed preset operation, and shifts to other zoom operations.

- When the {Sped} button is pressed again, stops the zoom at that position.

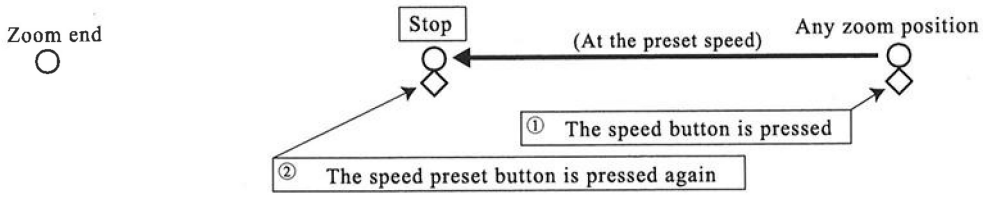

- The priority is given to the zoom operation with the zoom seesaw switch.

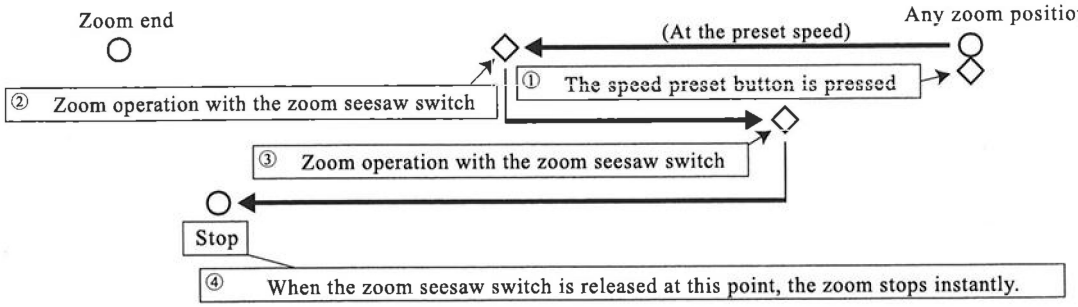

- The priority is given to the zoom operation with the {Shtl} button.

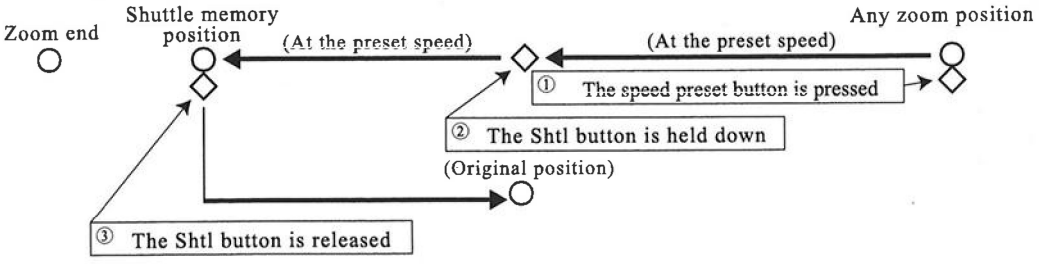

- The priority is given to the zoom operation with the {FRM1} button.

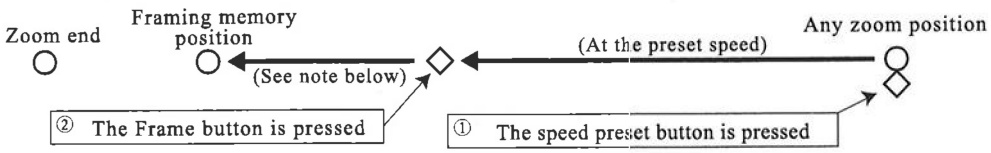

Note : When the {FRM1} button is pressed, the zoom speed changes, according to which the preset speed of the Frame Preset 1,2 is set.The zoom moves at the maximum speed when preset speed of the Frame Preset 1,2 is set to {FAST}, or at the preset speed when it is set to {PRE}. Then, stops at the framing memory position.

(3) FRAMING PRESET

Either PRE or FAST can be selected for the movement speed to a predetermined focus or picture angle.

- PRE ---------- Preset speed setting (Speed which was set by following the (2) Speed preset procedure or numerical value which was set on the information display)
- FAST ---------- Maximum speed setting (fast speed)

There are three framing preset types based on how the settings are combined.

■ 1. Framing Preset [Zoom]

This enables a predetermined picture angle and movement speed (zoom speed) to be reproduced easily. PRE is the factory setting. If the FAST setting is used, it must be set on the information display.

■ 2. Framing Preset [Focus] ---------- "A" type only

This enables a predetermined focus and movement speed (focus speed) to be reproduced easily.
It must be set on the information display.

■ 3. Framing Preset [Zoom, Focus] ---------- "A" type only

This enables the movement speed (focus speed, zoom speed) to a predetermined focus and picture angle to be reproduced easily.
It must be set on the information display.

Refer to the table below to perform the settings, since the settings using the information display is varied according to the operation to be performed.

Reference: Table of setting combinations

Frame preset type	Zoom/focus ON/OFF setting *1		Movement speed setting	
	Zoom	Focus	"PRE" (speed can be set)	"FAST" (maximum speed)
■ 1. Zoom	ON	OFF	The zoom moves at the preset speed.	The zoom moves at the maximum speed.
■ 2. Focus	OFF	ON	×	The focus moves at the maximum speed.
■ 3. Zoom, focus	ON	ON	The zoom and focus move at the preset speeds. *2	The zoom and focus move at the maximum speed.

*1 : Concerning the zoom/focus ON/OFF setting
For the procedure to be following for performing the settings on the information display, refer to the following pages in the Information Display Manual.
Frame1 : Zoom ----- Page E3-37
Focus ----- Page E3-38
Frame2 : Zoom ----- Page E3-40
Focus ----- Page E3-41

*2 : The zoom and focus are controlled in such a way that they start simultaneously and stop simultaneously.

* (NOTE): Up to two framing presets, Frame1 and Frame2, can be stored in the memory. Only Frame1 is described in the description given on the following pages. Frame1 is indicated as FRM1.

■ 1. Framing Preset [Zoom]

Concerning the illustrations

* (NOTE): The illustrations show the switches with the functions below allocated to them. Bear in mind, however, that if these functions have been allocated to other switches, there will be a discrepancy between what is shown in the illustrations and the actual statuses of the switches.

1) Shtl function ---------- This is allocated to the AUX1 switch (factory setting).

2) FRM1 function ------- This is allocated to the AUX2 switch (factory setting).

1. How to store the Framing memory position

Zoom to the selected position that you want to store, while holding the zoom position, press the FRM1 button while holding down the Memo button. This stores the framing memory position.

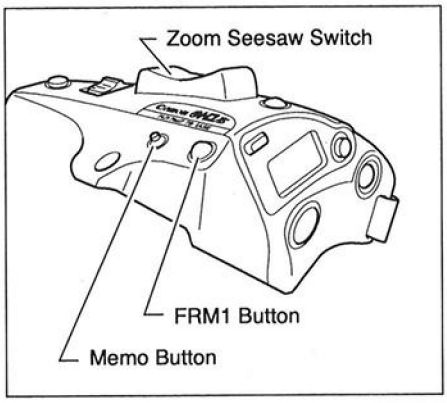

Fig. 6-7

*(NOTE): This framing memory position is different from the shuttle memory position (Refer to the (1) Shuttle shot). The stored zoom position remains in the memory, even after the power is turned off.

2. How to set the zoom speed to the framing memory position

On the information display, select PRE or FAST as the FRM1 speed setting.

- PRE ---------- For the preset speed setting (preset speed)
- FAST ---------- For the maximum speed setting (fast speed)

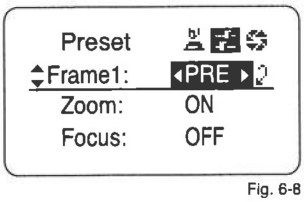

Fig. 6-8

The numerical value (see Fig. 6-9) which was set on the information display or by following the (2) Speed preset procedure is reflected as the speed.

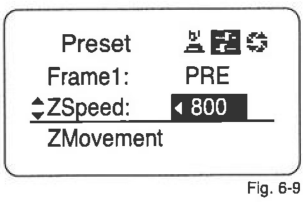

Fig. 6-9

3. How to move to the framing memory position

Once the FRM1 button is pressed, the zoom starts to move toward the framing memory position at the preset speed. When the zoom reaches to the framing memory position, it stops and stays there.

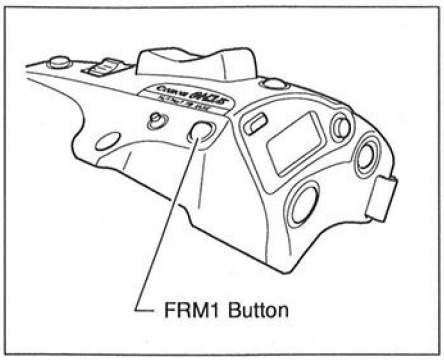

Fig. 6-10

*(NOTE): It is not necessary to hold down the FRM1 button, until the zoom reaches to the framing memory position, as for the Shtl button. (refer to (1) Shuttle shot) Just simply press the FRM1 button.

4. How to cancel movement to the framing memory position or switch to other zoom operations

During movement to the framing memory position, the movement can be canceled and/or switched to other zoom operation by any of the following operations.

- Pressing the FRM1 button again stops movement to the framing memory position, and the zoom stays at that point.
- Zoom operation with the zoom seesaw switch can immediately take over.
- Zoom operation with the Shtl button can immediately take over.
- Operation is performed using the switch to which the Sped function has been allocated. The figure on the right shows a case where this function was allocated to the VTR switch.

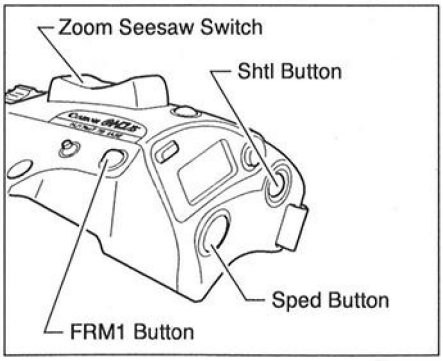

Fig. 6-11

■ 2. Framing Preset [Focus] ("A" type only)

Concerning the illustrations

* (NOTE): The illustrations show the switches with the functions below allocated to them. Bear in mind, however, that if these functions have been allocated to other switches, there will be a discrepancy between what is shown in the illustrations and the actual statuses of the switches.

FRM1 function ---------- This is allocated to the AUX2 switch (factory setting).

1. How to store the framing memory position

Focus to the selected position that you want to store, while holding the focus position, press the FRM1 button while holding down the Memo button. This stores the framing memory position.

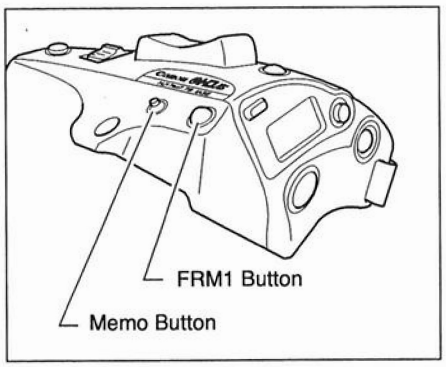

Fig. 6-12

* (NOTE): Some focus operations are performed using the focus demand and others are performed manually. When these operations are to be performed manually, set the focus operation change-over knob to the MANU position.

2. How to set the focus speed to the framing memory position

On the information display, select FAST as the FRM1 speed setting.

• FAST ---------- For the maximum speed setting (fast speed)

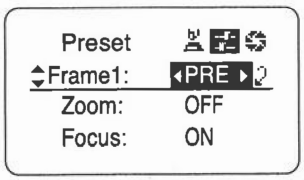

Fig. 6-13

3. How to move to the framing memory position

Once the FRM1 button is pressed, the focus starts to move toward the framing memory position at the maximum speed. When the focus reaches to the framing memory position, it stops and stays there.

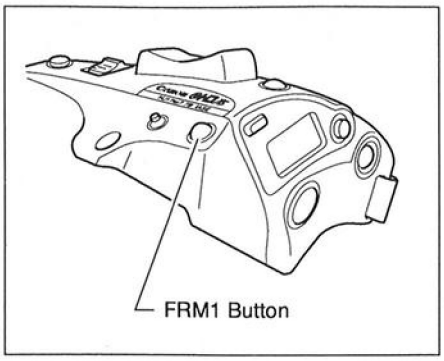

Fig. 6-14

*(NOTE): It is not necessary to hold down the FRM1 button, until the focus reaches to the framing memory position, as for the Shtl button. (refer to (1) Shuttle Shot) Just simply press the FRM1 button.

4. How to cancel movement to the framing memory position or switch to other focus operations

During movement to the framing memory position, the movement can be canceled and/or switched to other focus operation by any of the following operations.

- Pressing the FRM1 button again stops movement to the framing memory position, and the focus stays at that point.
- When the focus demand is operated, the movement to the memory position stops, and the focus moves to the operation position of the focus demand.

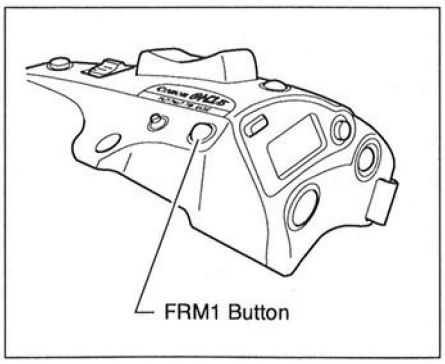

Fig. 6-15

■ 3. Framing Preset [Zoom, Focus] ("A" type only)

Concerning the illustrations

* (NOTE): The illustrations show the switches with the functions below allocated to them. Bear in mind, however, that if these functions have been allocated to other switches, there will be a discrepancy between what is shown in the illustrations and the actual statuses of the switches.

1) Shtl function ---------- This is allocated to the AUX1 switch (factory setting).

2) FRM1 function ------- This is allocated to the AUX2 switch (factory setting).

1. How to store the framing memory position

Zoom or focus to the selected position that you want to store, while holding the position, press the FRM1 button while holding down the Memo button. This stores the framing memory position.

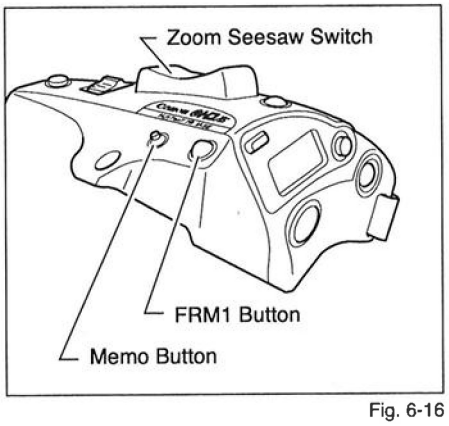

Fig. 6-16

*(NOTE): This framing memory position is different from the shuttle memory position (Refer to the (1) Shuttle shot). The stored position remains in the memory, even after the power is turned off.

2. How to set the speed to the framing memory position

On the information display, select PRE or FAST as the FRM1 speed setting.

- PRE ---------- For the preset speed setting (preset speed)
- FAST ---------- For the maximum speed setting (fast speed)

The numerical value (see Fig. 6-18) which was set on the information display or by following the (2) Speed preset procedure is reflected as the speed.

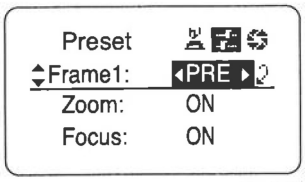

Fig. 6-17

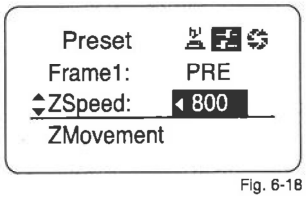

Fig. 6-18

3. How to move to the framing memory position

Once the FRM1 button is pressed, the zoom or focus starts to move toward the framing memory position at the preset speed. When the zoom or focus reaches to the framing memory position, it stops and stays there.

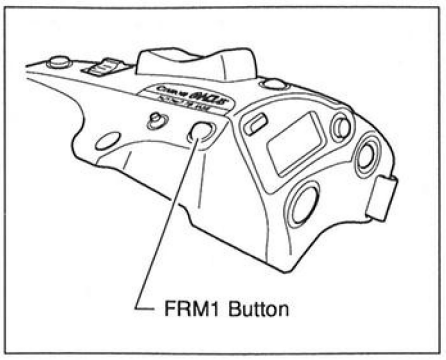

Fig. 6-19

*(NOTE): It is not necessary to hold down the FRM1 button, until the zoom or focus reaches to the framing memory position, as for the Shtl button. (refer to (1) Shuttle shot) Just simply press the FRM1 button.

4. How to cancel movement to the framing memory position or switch to other operations

During movement to the framing memory position, the movement can be canceled and/or switched to other operation by any of the following operations.

- Pressing the FRM1 button again stops movement to the framing memory position.
- Operation with the zoom seesaw switch can immediately take over.
- Operation with the Shtl button can immediately take over.
- Operation is performed using the switch to which the Sped function has been allocated. The figure on the right shows a case where this function was allocated to the VTR switch.
- When the focus demand is operated, the movement to the memory position stops, and the focus moves to the operation position of the focus demand.

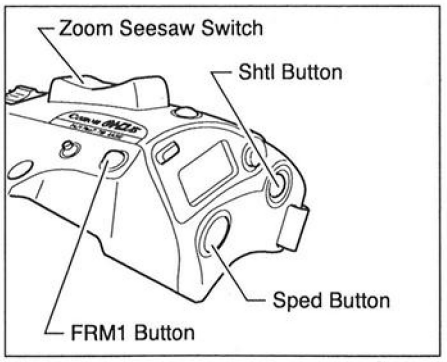

Fig. 6-20

(3) Framing Preset Operation Diagrams

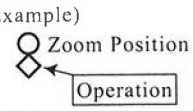

● Basic Movement of the Framing Preset Operation

- When the {FRM1} button is pressed, the zoom moves toward the framing memory position (preset zoom position) and stops at the framing memory position.
  The zoom moves at the maximum speed when preset speed of the Frame Preset 1,2 is set to {FAST}, or at the preset speed when it is set to {PRE}.

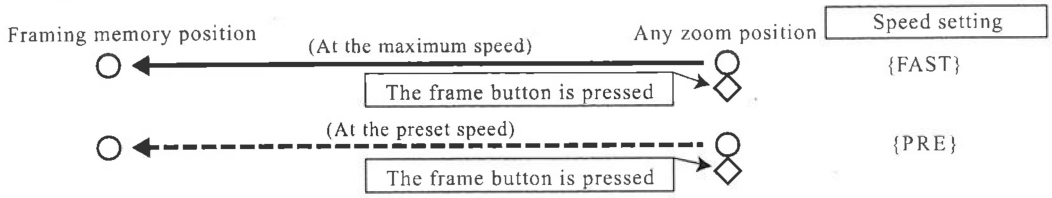

● Other

Any of the following zoom operations can be used to cancel the framing preset operation and/or change to other zoom operation.

- Before the zoom reaches to the framing memory position, by pressing the {FRM1} button again, the zoom stops instantly at that position.

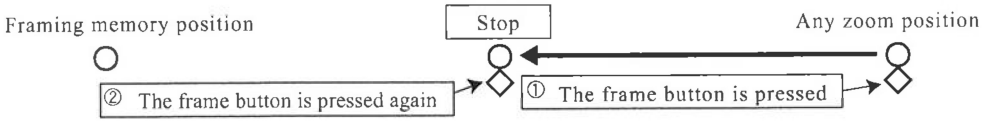

- Zoom operation with the zoom seesaw switch can immediately take over.

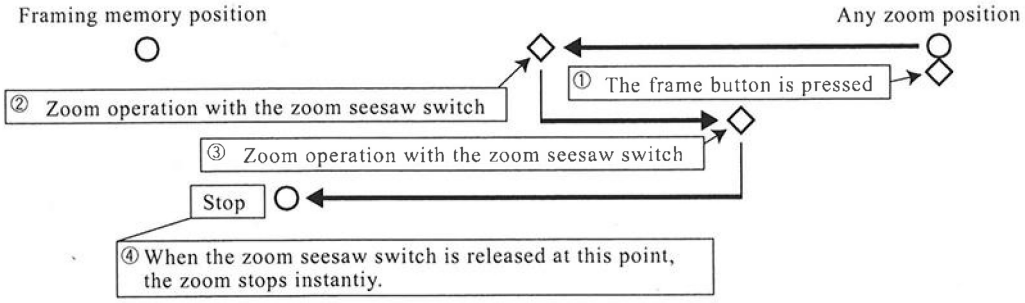

- Zoom operation with the {Shtl} button will immediately take over.
  (Note: The framing memory position and the shuttle memory position are independently stored.)

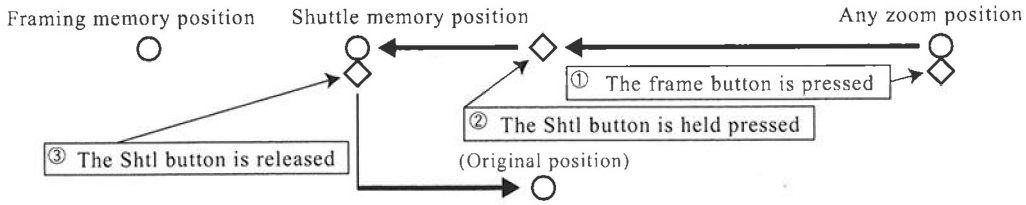

- Zoom operation with the switch can immediately take over.
  Once the speed preset button is pressed, the zoom moves at the preset speed and direction until it reaches its end.

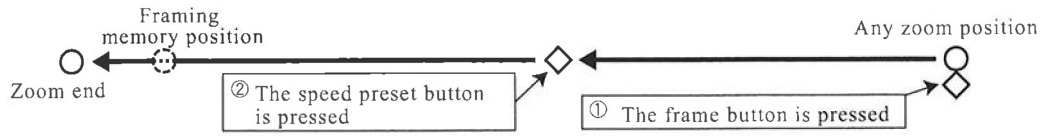

Note : The zoom moves at the preset speed and direction until it reaches its end, once the speed preset button is pressed.

List of Digital Function Buttons

{Memo} button

Pressing the memo button together with other button allows you to preset the zoom position, direction and/or speed

- Setting the shuttle memory position

  Press (Memo) + (Shtl) at the desired position.

- Setting the framing memory position.

  Press (Memo) + (Frame) at the desired position.

- Setting the zoom speed {PRE} and zoom direction.

  During pressing (Zoom seesaw switch) + (Memo)

- Zoom track position setting

  Press (Memo) + (IRIS) at the position that you want to set.

Zoom track function

Approx. 3 sec.

(Memo) + (IRIS)

Zoom end — Allowable servo zoom range when the function is on — Zoom end

Setting position — Setting position

For more detailed functions, refer to "Zoom track function".

Speed button (When assigning the function)

When the button is pressed, the zoom starts to move at the preset speed and to the determined direction and stops at the zoom end. (either tele end or wide end).

Zoom end —Moves at the preset speed— Any zoom position [Preset button is pressed]

For the details of this function, see the section "Speed Preset".

{Shtl} button

- The zoom moves to the shuttle memory position while the Shtl button is held down. Once this position is reached, the zoom stays in this position while the Shtl button is held down.

Shuttle memory position [Shtl button is held down] Original position

- Releasing the Shtl button returns the zoom to the original position.

Shuttle memory position [Shtl button is released] Original position

For the details of this function, see the section "Shuttle Shot".

{FRM1} button

The zoom moves to the preset zoom position, when the frame button is pressed. The zoom moves at the preset speed when the speed mode selector is set to {PRE} position, or at the maximum speed when it is set to {FAST} position

Framing memory position — Any zoom position [Frame button is pressed]

For the details of this function, see the section "Framing Preset".

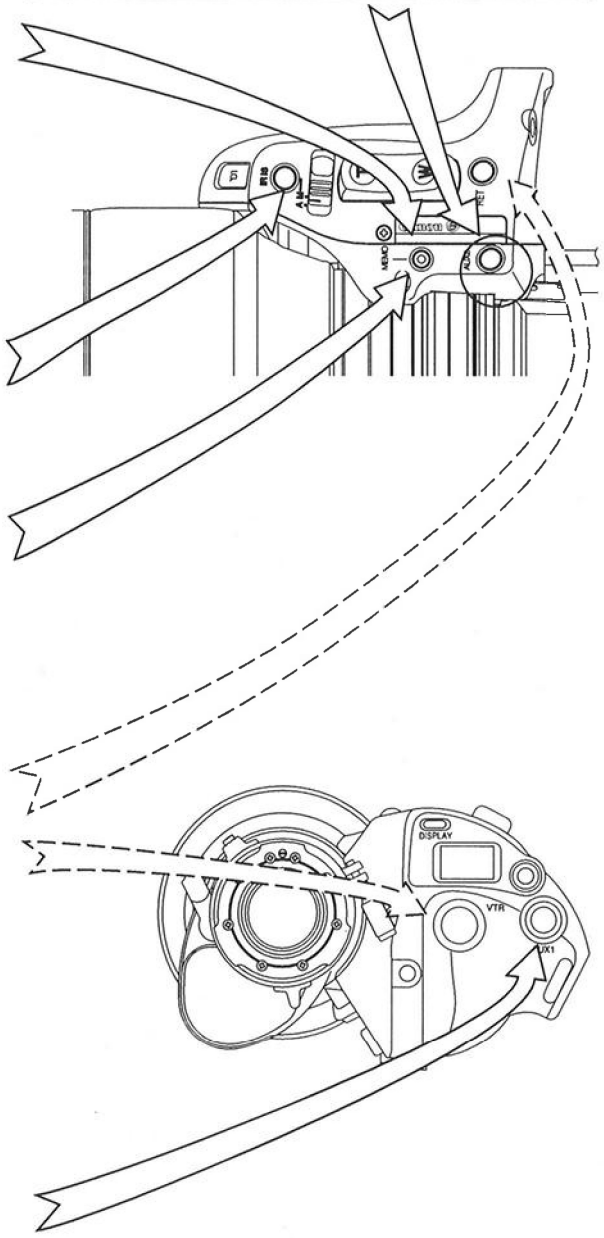

7. OTHER FUNCTIONS AND OPERATIONS

(Shapes of other models differ slightly from the drawing in this manual. However, operation procedure is same.)

ENCODER OUTPUT SETTING

Encoder pulses can be output from the lens. Select ON to use the encoder pulses;otherwise, select OFF.

1. Push the DISPLAY switch to turn on the display.
2. Push the Set key and move the left or right key to display the Info screen. (Fig.7-1)
3. Move the down key. (Fig.7-2)
4. Select {ON} or {OFF} using the left or right key.
5. Push the display switch to complete the setting.
   (The setting is also ended when the display is cleared automatically after two minutes without performing any operations or when operation has moved on to another setting item.)

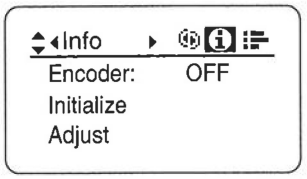

Fig7-1

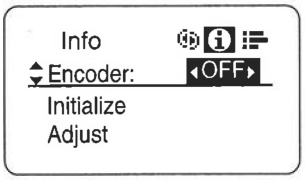

Fig7-2

Selection item	(D) OFF	ON
Function	Output disabled	Output enabled

(D): Default value

For more details on operation and the precautions to be heeded, refer to the operatinginstructions given in the Information Display section.

ESCAPE OPERATION

This operation makes it possible to jump instantly to the User 0 setting status (factory setting status) from the current setting status whether for any user (User 0 to 9) or User A.

* (NOTE): The jump operation cannot be performed in the lock status.

* (NOTE): Even when the jump operation is performed, the settings of the following items will remain the same as before the jump operation: auto iris gain value, remote iris gain value, F-Hold setting, encoder output setting, Initialize operation setting and Adjustment of Camera Fol Voltage.

(1) For User 0 to 9

1. Hold down the DISPLAY switch and SET key for more than 2 seconds.

The following message is displayed depending on the user who was using the system prior to the jump operation.
User 0: User 0 Reset Now
User 1 to 9: Escape To User 0

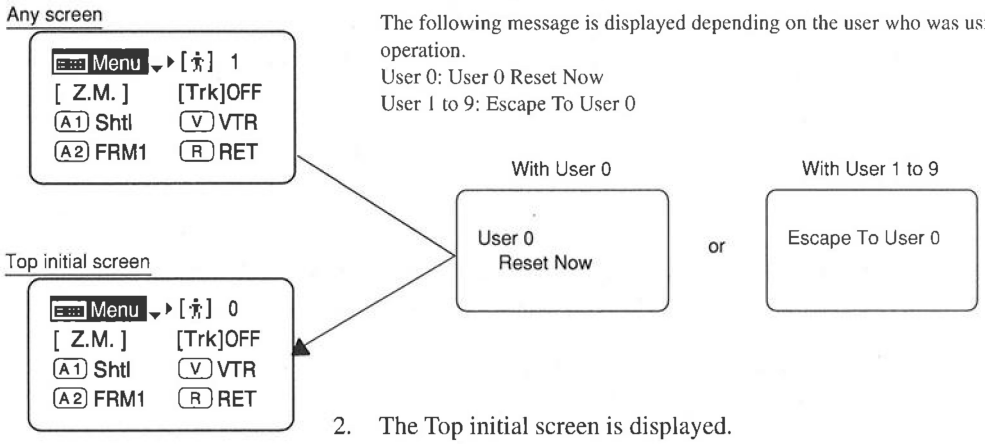

2. The Top initial screen is displayed.

(2) For User A (analog mode)

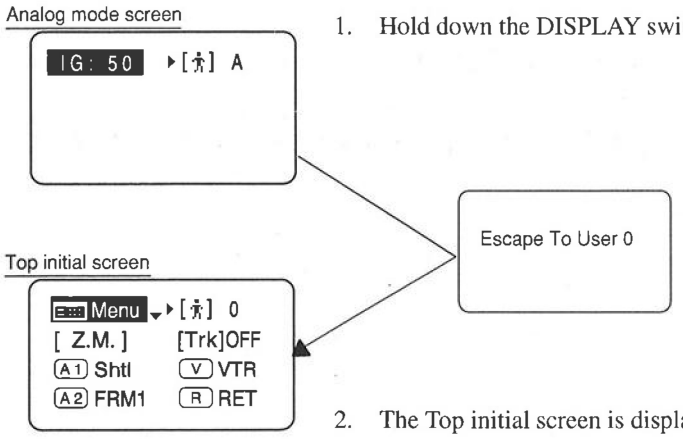

1. Hold down the DISPLAY switch and SET key for more than 2 seconds.

2. The Top initial screen is displayed.

When the power is turned on again:

The same user who was using the system prior to the jump operation is selected. However, if the user was changed after the jump operation was performed, the user using the system after the change was made is selected instead.

USER, ANALOG MODE, LOCK MODE

For the user and analog modes, there are the following three categories.

User 1 to 9

Detailed settings can be performed for each user who will be performing operations. The settings established can be saved. The number of users for whom these settings can be performed is 9. (User 1 to 9)

User 0

This is the default user for whom the settings can be changed and used on a temporary basis. The settings cannot be saved.The settings are released when switching to User 1 to 9 or User A (analog mode) or when the power is turned off. When the escape operation is performed, User 0 is set. When User 0 is selected, the factory settings (except for the auto iris gain value, remote iris gain value, F-Hold setting, encoder output setting, Initialize operation setting and Adjustment of Camera Fol Voltage) are established.

User A (analog mode)

This is selected when a conventional type of drive unit (with analog specifications) is to be operated. When the analog mode is established, the digital functions can no longer be used. The following applies to the drive units when this mode has been set.

- The VTR, RET, IRIS A/M and IRIS INST switches perform the functions that correspond to the lettering inscribed on them. The rocker switch serves as a regular zooming switch.
- The AUX1, AUX2 and MEMO switches cannot be used.
- The auto iris gain adjustment can be set by operating the display or the trimmer control.
- The shuttle shot, frame preset, speed preset and zoom track functions cannot be used.

For details on the operating procedures for User 0 to 9, refer to User 0 to 9 Given in the Information Display section.

For details on the operating procedures of User A (analog mode), refer to User A (analog mode) given in the Information Display section.

■ Lock mode

Users can set the lock mode to ensure that the settings established will not be changedarbitrarily. Two operations can be performed on the display: the auto iris gain adjustment and a change that can be made to another user. If the lock mode is established,it must be released (set to Unlock) before these operations can be performed.The password is needed to release the lock mode (set to Unlock) at setting stage.

The display of User 0 to 9 is shown as below.

Unlocked

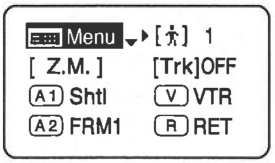

Locked

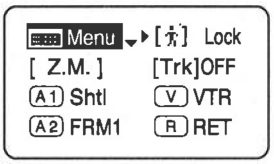

The display of User A (analog mode) is shown as below.

Unlocked

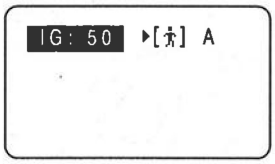

Locked

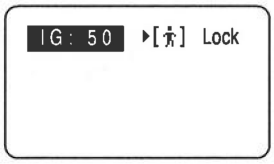

For details on the lock mode operating procedures for User 0 to 9, refer to the lock mode setting given in the Information Display section.

For details on the lock mode of User A (analog mode), refer to the analog lock mode setting and analog mode operation given in the Information Display section.

EXTENDER OPERATION
(For "IRSE" and "IASE" type lenses)

* (NOTE): This type of lens is equipped with a 2x extender. With the extender operation, the focal length of the lens is multiplied by 2 times. However, the F number drops by the corresponding amount of the extender.

		Master Lens	With 2× Extender
HJ11ex4.7B IRSE/IASE	Focal Length	4.7~52mm	9.4~104mm
	Max.Relative Aperture	1 : 1.9 (4.7~40.3mm)	1 : 3.8 (9.4~80.6mm)
		1 : 2.45 (52mm)	1 : 4.9 (104mm)
HJ17ex7.7B IRSE/IASE	Focal Length	7.7~131mm	15.4~262mm
	Max.Relative Aperture	1 : 1.8 (7.7~100.3mm)	1 : 3.6 (15.4~200.6mm)
		1 : 2.35 (131mm)	1 : 4.7 (262mm)
HJ17ex7.6B IRSE/IASE	Focal Length	7.6~130mm	15.2~260mm
	Max.Relative Aperture	1 : 1.8 (7.6~97.5mm)	1 : 3.6 (15.2~195mm)
		1 : 2.4 (130mm)	1 : 4.8 (260mm)
HJ22ex7.6B IRSE/IASE	Focal Length	7.6~168mm	15.2~336mm
	Max.Relative Aperture	1 : 1.8 (7.6~114.1mm)	1 : 3.6 (15.2~228.2mm)
		1 : 2.65 (168mm)	1 : 5.3 (336mm)
HJ21ex7.5B IRSE/IASE	Focal Length	7.5~158mm	15~316mm
	Max.Relative Aperture	1 : .9 (7.5~116mm)	1 : 3.8 (15~232mm)
		1 : 2.6 (158mm)	1 : 5.2 (316mm)

The 2x extender is inserted into the lens optical system by swinging the extender lever on the rear of the lens to the 2x indication side.

The 2x extender is removed from the lens optical system by swinging back the extender lever to the original position (1x position).

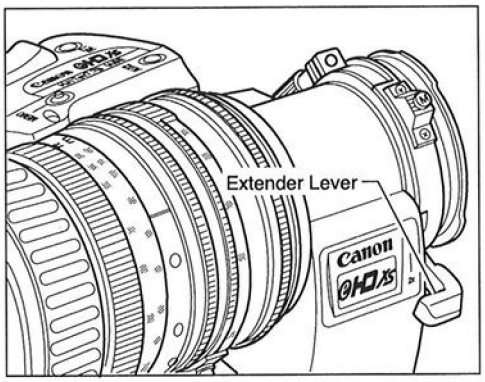

* (NOTE): Refer to the next page "How to change crossover mode and extender operation" for "WRSE" and "WASE" type lenses.
Refer to the page 7-9 "How to change crossover mode" for "VRSE" and "VASE" type lenses.

HOW TO CHANGE CROSSOVER MODE AND EXTENDER OPERATION
(For "WRSE" and "WASE" type lenses)

* (NOTE): This section is only applicable to WRSE and WASE type lenses which are equipped with a Crossover unit and 2x extender. Thereby, these lenses are applicable to use with switchable cameras. With the extender operation, the focal length of the lens is either 2 or 2.4 times and the F number multiplies by the same amount

■ FOR-Normal 4 : 3 or 16 : 9 mode
-Switchable 16 : 9 mode

● How to change the mode

Make sure that the extender lever is set to "2x" position and that the crossover mode lever is set to "STANDARD" position.

* (NOTE): When you switch the crossover mode change lever, please switch firmly to the end.

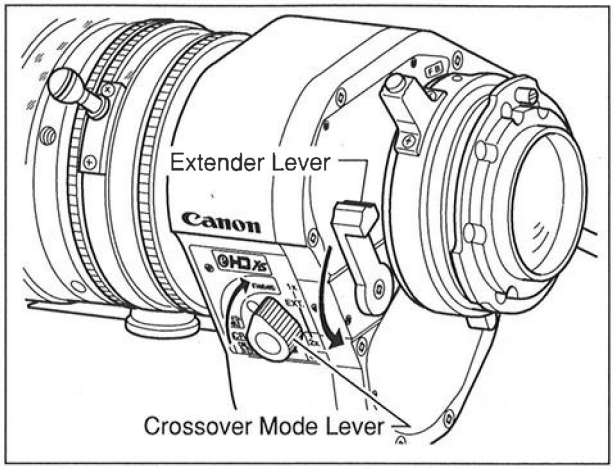

● Extender operation

The 2x extender is inserted into the lens optical system by swinging the extender lever on the rear of the lens to "2x" position.

The 2x extender is removed from the lens optical system by swinging back it to the original position ("1x" position).

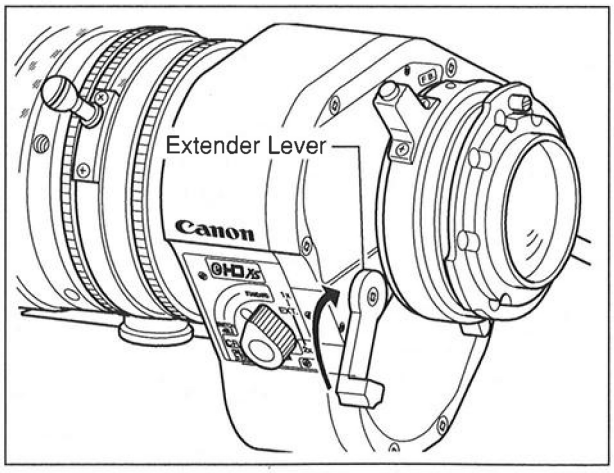

		Master Lens	With 2× Extender
HJ11ex4.7B WRSE/WASE	Focal Length	4.7~52mm	9.4~104mm
	Max.Relative Aperture	1 : 1.9 (4.7~40.3mm)	1 : 3.8 (9.4~80.6mm)
		1 : 2.45 (52mm)	1 : 4.9 (104mm)
HJ17ex7.7B WRSE/WASE	Focal Length	7.7~131mm	15.4~262mm
	Max.Relative Aperture	1 : 1.8 (7.7~100.3mm)	1 : 3.6 (15.4~200.6mm)
		1 : 2.35 (131mm)	1 : 4.7 (262mm)
HJ17ex7.6B WRSE/WASE	Focal Length	7.6~130mm	15.2~260mm
	Max.Relative Aperture	1 : 1.8 (7.6~97.5mm)	1 : 3.6 (15.2~195mm)
		1 : 2.4 (130mm)	1 : 4.8 (260mm)
HJ22ex7.6B WRSE/WASE	Focal Length	7.6~168mm	15.2~336mm
	Max.Relative Aperture	1 : 1.8 (7.6~114.1mm)	1 : 3.6 (15.2~228.2mm)
		1 : 2.65 (168mm)	1 : 5.3 (336mm)
HJ21ex7.5B WRSE/WASE	Focal Length	7.5~158mm	15~316mm
	Max.Relative Aperture	1 : 1.9 (7.5~116mm)	1 : 3.8 (15~232mm)
		1 : 2.6 (158mm)	1 : 5.2 (316mm)

■ FOR SWITCHABLE (4 : 3) MODE

● How to change the mode

For this switchable 4 : 3 mode, the crossover mode lever has to be set to "4 : 3" position, when the extender lever is set to "2x" position.

* (NOTE): When you switch the crossover mode change lever, please switch firmly to an end.

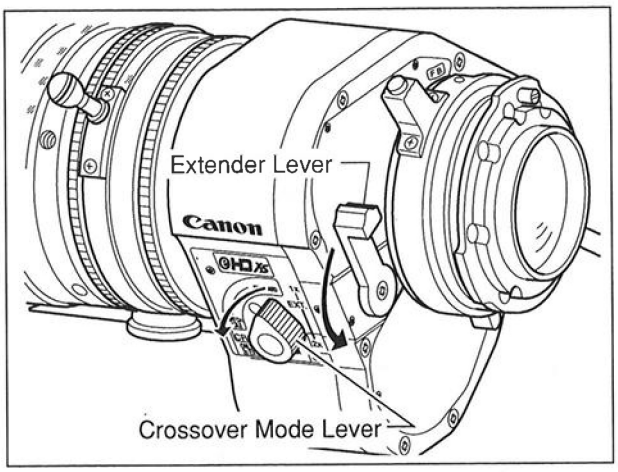

● Extender operation

The 2x extender is inserted into the lens optical system by swinging the extender lever to "2x" position.

When the extender is removed from the lens optical system by swinging back it to "1x" position, and returned to its original, switchable (4 : 3) mode, position.

		Master Lens	With 2× Extender (*)
HJ11ex4.7B WRSE/WASE	Focal Length	3.9~43mm	9.4~104mm
	Max.Relative Aperture	1 : 1.9 (3.9~40.9mm)	1 : 3.8 (9.4~80.6mm)
		1 : 2.0 (43mm)	1 : 4.9 (104mm)
HJ17ex7.7B WRSE/WASE	Focal Length	6.4~109mm	15.4~262mm
	Max.Relative Aperture	1 : 1.8 (6.4~103.3mm)	1 : 3.6 (15.4~200.6mm)
		1 : 1.9 (109mm)	1 : 4.7 (262mm)
HJ17ex7.6B WRSE/WASE	Focal Length	6.3~107mm	15.2~260mm
	Max.Relative Aperture	1 : 1.8 (6.3~96.3mm)	1 : 3.6 (15.2~195mm)
		1 : 2.0 (107mm)	1 : 4.8 (260mm)
HJ22ex7.6B WRSE/WASE	Focal Length	6.3~139mm	15.2~336mm
	Max.Relative Aperture	1 : 1.8 (6.3~114.2mm)	1 : 3.6 (15.2~228.2mm)
		1 : 2.19 (139mm)	1 : 5.3 (336mm)
HJ21ex7.5B WRSE/WASE	Focal Length	6.2~130mm	15~316mm
	Max.Relative Aperture	1 : 1.9 (6.2~116mm)	1 : 3.8 (15.6~232mm)
		1 : 2.15 (130mm)	1 : 5.2 (316mm)

(*) : Compared with the focal length of the master lens at switchable (4 : 3) mode, actual focal length of the lens when 2x extender is inserted into the lens optical system, becomes 2.4 times.

The relationship between the TV camera and its mode is shown in the table below.

TV camera	Aspect Ratio	Position of the crossover mode lever	Remarks
Switchable camera	Switchable 4 : 3	SWITCHABLE position	For switchable 4 : 3 mode
	16 : 9	STANDARD position	For switchable 16 : 9 mode
Normal 16 : 9 camera	16 : 9		These cameras have no switchable capability
Normal 4 : 3 camera	4 : 3		

HOW TO CHANGE CROSSOVER MODE
(For "VRSE" and "VASE" type lenses)

* (NOTE): "VRSE" and "VASE" type lenses are equipped with the Cross-Over unit instead of the 2x extender. Thereby, these lenses are applicable to use with the switchable cameras.

■ FOR-Normal 4 : 3 or 16 : 9 mode -Switchable 16 : 9 mode

● How to change the mode

The crossover mode lever on the rear of the lens has to be set to "16:9 STANDARD" position.

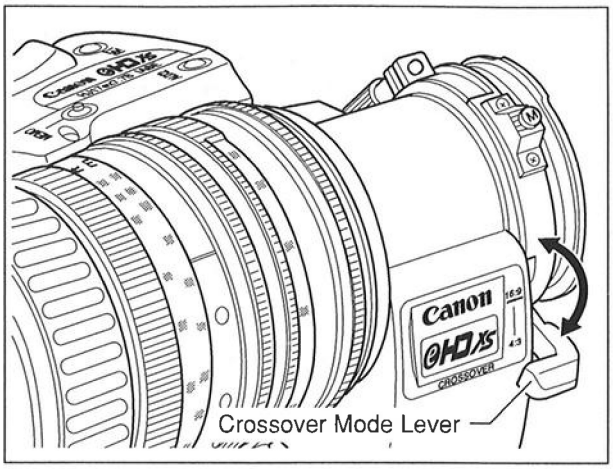

■ FOR SWITCHABLE (4 : 3) MODE

● How to change the mode

The crossover mode lever on the rear of the lens has to be set to "4:3" position.

		For Nomal(4:3 and 16:9)MODE and Switchable(16:9)MODE	For Switchable(4:3)MODE(*)
HJ11ex4.7B VRSE/VASE	Focal Length	4.7~52mm	3.9~43mm
	Max.Reletive Aperture	1 : 1.9 (4.7~40.3mm)	1 : 1.9 (3.9~40.9mm)
		1 : 2.45 (52mm)	1 : 2.0 (43mm)
HJ17ex7.7B VRSE/VASE	Focal Length	7.7~131mm	6.4~109mm
	Max.Reletive Aperture	1 : 1.8 (7.7~100.3mm)	1 : 1.8 (6.4~103.3mm)
		1 : 2.35 (131mm)	1 : 1.9 (109mm)
HJ17ex7.6B VRSE/VASE	Focal Length	7.6~130mm	6.3~107mm
	Max.Reletive Aperture	1 : 1.8 (7.6~97.5mm)	1 : 1.8 (6.3~96.3mm)
		1 : 2.4 (130mm)	1 : 2.0 (107mm)
HJ22ex7.6B VRSE/VASE	Focal Length	7.6~168mm	6.3~139mm
	Max.Reletive Aperture	1 : 1.8 (7.6~114.1mm)	1 : 1.8 (6.3~114.2mm)
		1 : 2.65 (168mm)	1 : 2.19 (139mm)
HJ21ex7.5B VRSE/VASE	Focal Length	7.5~158mm	6.2~130mm
	Max.Reletive Aperture	1 : 1.9 (7.5~116mm)	1 : 1.9 (6.2~116mm)
		1 : 2.6 (158mm)	1 : 2.15 (130mm)

(*) : In case the switchable (4:3) mode is applied, the lens can be used, even if the crossover mode lever is set to "16:9 STANDARD" position. In this case, the focal length of the lens becomes 8 mm to 128 mm and equivalent to a 1.2x extender compared with the focal length of the master lens in switchable (4:3) mode.

The relationship between the TV camera and its mode is shown in the table below.

TV camera	Aspect Ratio	Position of the crossover mode lever	Remarks
Switchable camera	Switchable 4 : 3	4 : 3 position	For switchable 4 : 3 mode
	16 : 9	16 : 9 STANDARD position	For switchable 16 : 9 mode
Normal 16 : 9 camera	16 : 9		These cameras have no switchable capability
Normal 4 : 3 camera	4 : 3		

MACRO OPERATION

When the macro function of the lens is used, macro shooting is enabled.
In macro shooting, the object distance becomes shorter than the normal minimum object distance (M.O.D.).
The minimum object distance by macro operation for this lens is only 1cm at wide end of the focal length and maximum macro position.

To operate the macro, press the macro button to unlock the macro ring. While holding it down, turn the macro ring at the rear of the lens clockwise as viewed from the camera side to allow macro shooting.

1. Set the lens to wide end by manual or servo zoom operation.

2. Bring the object into focus by turning the macro button (macro ring).

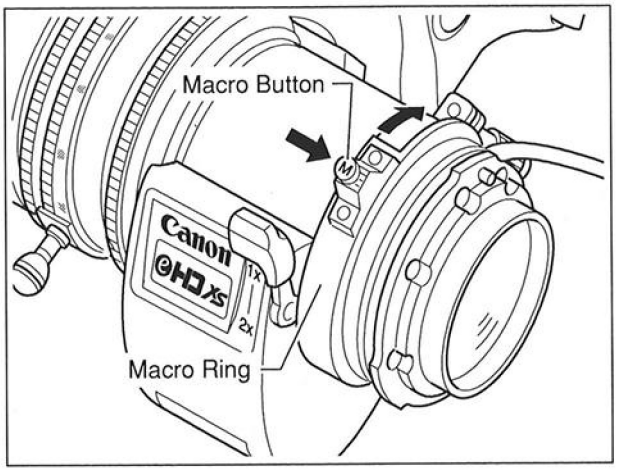

Object distance and object dimensions in macro shooting

		Zoom position	Macro button	Minimum object distance*1	Object dimensions*3
HJ11ex4.7B	Normal operation	4.7mm	Locked	30cm	71.4×40.2cm
		52mm	Locked	30cm	6.2×3.5cm
	Macro operation	4.7mm	Max.Macro position*2	1cm	10.0×5.6cm
HJ17ex7.7B	Normal operation	7.7mm	Locked	75cm	87.4×49.2cm
		131mm	Locked	75cm	5.3×3.0cm
	Macro operation	7.7mm	Max.Macro position*2	1cm	7.0×3.9cm
HJ17ex7.6B	Normal operation	7.6mm	Locked	56cm	65.4×36.8cm
		130mm	Locked	56cm	4.0×2.3cm
	Macro operation	7.6mm	Max.Macro position*2	1cm	6.9×3.9cm
HJ22ex7.6B	Normal operation	7.6mm	Locked	85cm	92.5×69.4cm
		168mm	Locked	85cm	4.25×3.19cm
	Macro operation	7.6mm	Max.Macro position*2	1cm	7.4×4.2cm
HJ21ex7.5B	Normal operation	7.5mm	Locked	85cm	120.4×67.7cm
		158mm	Locked	85cm	5.6×3.2cm
	Macro operation	7.5mm	Max.Macro position*2	1cm	10.4×5.9cm

*1 : The object distance is measured from the front lens vertex.

*2 : Macro shooting is possible, regardless of where the macro ring is positioned between the locked position and maximum macro rotated position. At the intervening positions, the above data vary.

*3 : These data are for 16:9 aspect ratio camera system.

*(NOTE): Macro operation is also possible at any zoom position other than the wide end of the focal length, but the object distance increases.

Multi-point focus shooting

In macro shooting, when zooming to change the focal length, the focal point varies.
The multi-point focus shooting technique uses this characteristic.
The focal point is shifted by the zoom operation.

Follow the steps bellow :

Setting procedure

Step 1 : Zoom in to a far object, and bring it into focus by normal focus operation.

Step 2 : Zoom out to a near object and bring into focus by macro operation.

Step 3 : Zoom in to the far object again while not touching the macro button set by above step 2, and bring into focus again by normal focus operation.

When steps 1 to 3 have been performed, the setting for multi-point focus shooting is completed.

When zooming in, the focal point is shifted from the object in the foreground to the farther object in the background continuously.
Or, when zooming out, the focal point is shifted from the farther object in the background to the object in the foreground continuously.

8. PRODUCT SPECIFICATIONS

PRODUCT SPECIFICATIONS

(1) HJ11ex4.7B PRODUCT SPECIFICATIONS

	In normal(4:3)mode		In 16:9 mode	
	1×	2×	1×	2×
Focal Length	4.7-52mm	9.4-104mm	4.7-52mm	9.4-104mm
Zoom Ratio	11×			
Maximum Relative Aperture	1:1.9(4.7-40.3mm) 1:2.45(52mm)	1:3.8(9.4-80.6mm) 1:4.9(104mm)	1:1.9(4.7-40.3mm) 1:2.45(52mm)	1:3.8(9.4-80.6mm) 1:4.9(104mm)
Image Format	8.8×6.6mm(Dia.11mm)		9.6×5.4mm(Dia.11mm)	
Angular Field of View (Wide) (Tele)	86.2° ×70.1° 9.7° ×7.3°	50.2° ×38.7° 4.8° ×3.6°	91.2° ×59.8° 10.5° ×5.9°	54.1° ×32.1° 5.3° ×3.0°
Minimum Object distance (M.O.D)	0.3m (from the lens vertex)			
Object Dimensions (Wide) at M.O.D (Tele)	65.3×49.0cm 5.7×4.3cm	32.7×24.5cm 2.9×2.2cm	71.4×40.2cm 6.2×3.5cm	35.7×20.1cm 3.1×1.8cm

	In switchable (4 : 3) mode	
	1×	2.4×
Focal Length	3.9-43mm	9.4-104mm
Zoom Ratio	11×	
Maximum Relative Aperture	1:1.9(3.9-40.9mm) 1:2.0(43mm)	1:3.8(9.4-80.6mm) 1:4.9(104mm)
Image Format	7.2×5.4mm(Dia.9mm)	
Angular Field of View (Wide) (Tele)	86.2° ×70.1° 9.7° ×7.3°	41.9° ×32.1° 4.0° ×3.0°
Minimum Object distance (M.O.D)	0.3m (from the lens vertex)	
Object Dimensions (Wide) at M.O.D (Tele)	65.3×49.0cm 5.7×4.3m	26.4×19.8cm 2.4×1.8cm

Flange back	48 mm (in air)
Thread for filters	127mm pitch0.75 (Hood Unit Thread Size)
Zoom speed for full range	Max. 0.5 ± 0.2 s
Focus speed for full range	1.3 ± 0.3 s
Iris	Control from camera
Mount	Bayonet Mount
Power (input)	Nominal DC12V (10~17V)
Power consumption	280 mA (max.) for ("R" type lenses)
	500 mA (max.) for ("A" type lenses)
Mass	approx. 1.94 kg ("IRSE" type lenses)
Operating temperature	Temperature : -20°C to + 45°C
	Humidity : 5% to 95%RH (no condensation)

(2) HJ17ex7.7B PRODUCT SPECIFICATIONS

	In normal(4:3)mode		In 16:9 mode	
	1×	2×	1×	2×
Focal Length	7.7-131mm	15.4-262mm	7.7-131mm	15.4-262mm
Zoom Ratio	17×			
Maximum Relative Aperture	1:1.8(7.7-100.3mm) 1:2.35(131mm)	1:3.6(15.4-200.6mm) 1:4.7(262mm)	1:1.8(7.7-100.3mm) 1:2.35(131mm)	1:3.6(15.4-200.6mm) 1:4.7(262mm)
Image Format	8.8×6.6mm(Dia.11mm)		9.6×5.4mm(Dia.11mm)	
Angular Field of View (Wide) (Tele)	59.5° ×46.4° 3.85° ×2.89°	31.9° ×24.2° 1.92° ×1.44°	63.9° ×38.7° 4.2° ×2.36°	34.6° ×19.9° 2.1° ×1.2°
Minimum Object distance (M.O.D)	0.75m (from the lens vertex)			
Object Dimensions at M.O.D (Wide) (Tele)	80.4×60.3cm 4.83×3.62cm	40.2×30.2cm 2.42×1.81cm	87.4×49.2cm 5.3×3.0cm	43.7×24.6cm 2.7×1.5cm

	In switchable (4 : 3) mode	
	1×	2.4×
Focal Length	6.4-109mm	15.4-262mm
Zoom Ratio	17×	
Maximum Relative Aperture	1:1.8(6.4-103.3mm) 1:1.9(109mm)	1:3.6(15.4-205.0mm) 1:4.6(262mm)
Image Format	7.2×5.4mm(Dia.9mm)	
Angular Field of View (Wide) (Tele)	59.5° ×46.4° 3.85° ×2.89°	26.3° ×19.9° 1.57° ×1.18°
Minimum Object distance (M.O.D)	0.75m (from the lens vertex)	
Object Dimensions at M.O.D (Wide) (Tele)	80.4×60.3cm 4.83×3.62m	32.8×24.6cm 2.0×1.5cm

Flange back	48 mm (in air)
Thread for filters	94mm pitch 1 (Front lens barrel Size) or 105mm pitch 1 (Hood Unit Thread Size)
Zoom speed for full range	Max. 0.5 ± 0.2 s
Focus speed for full range	1.3 ± 0.3 s
Iris	Control from camera
Mount	Bayonet Mount
Power (input)	Nominal DC12V (10~17V)
Power consumption	280 mA (max.) for ("R" type lenses) 500 mA (max.) for ("A" type lenses)
Mass	approx. 1.74 kg ("IRSE" type lenses)
Operating temperature	Temperature : -20°C to + 45°C Humidity : 5% to 95%RH (no condensation)

(3) HJ17ex7.6B PRODUCT SPECIFICATIONS

	In normal(4:3)mode		In 16:9 mode	
	1×	2×	1×	2×
Focal Length	7.6-130mm	15.2-260mm	7.6-130mm	15.2-260mm
Zoom Ratio	17×			
Maximum Relative Aperture	1:1.8(7.6-97.5mm) 1:2.4(130mm)	1:3.6(15.2-195mm) 1:4.8(260mm)	1:1.8(7.6-97.5mm) 1:2.4(130mm)	1:3.6(15.2-195mm) 1:4.8(260mm)
Image Format	8.8×6.6mm(Dia.11mm)		9.6×5.4mm(Dia.11mm)	
Angular Field of View (Wide) (Tele)	60.1° ×46.9° 3.9° ×2.9°	32.3° ×24.5° 1.9° ×1.5°	64.6° ×39.1° 4.2° ×2.4°	35.1° ×20.1° 2.1° ×1.2°
Minimum Object distance (M.O.D)	0.56m (from the lens vertex)			
Object Dimensions (Wide) at M.O.D (Tele)	59.9×44.9cm 3.7×2.8cm	30.0×22.5cm 1.9×1.4cm	65.4×36.8cm 4.0×2.3cm	32.7×18.4cm 2.0×1.2cm

	In switchable (4 : 3) mode	
	1×	2.4×
Focal Length	6.3-107mm	15.2-260mm
Zoom Ratio	17×	
Maximum Relative Aperture	1:1.8(6.3-96.3mm) 1:2.0(107mm)	1:3.6(15.2-195mm) 1:4.8(260mm)
Image Format	7.2×5.4mm(Dia.9mm)	
Angular Field of View (Wide) (Tele)	60.1° ×46.9° 3.9° ×2.9°	26.6° ×20.1° 1.6° ×1.2°
Minimum Object distance (M.O.D)	0.56m (from the lens vertex)	
Object Dimensions (Wide) at M.O.D (Tele)	59.9×44.9cm 3.7×2.8m	24.6×18.4cm 1.6×1.2cm

Flange back	48 mm (in air)
Thread for filters	82mm pitch0.75 (Front lens barrel Size)
Zoom speed for full range	Max. 0.5 ± 0.2 s
Focus speed for full range	1.3 ± 0.3 s
Iris	Control from camera
Mount	Bayonet Mount
Power (input)	Nominal DC12V (10~17V)
Power consumption	280 mA (max.) for ("R" type lenses)
	500 mA (max.) for ("A" type lenses)
Mass	approx. 1.62 kg ("IRSE" type lenses)
Operating temperature	Temperature : -20°C to + 45°C
	Humidity : 5% to 95%RH (no condensation)

(4) HJ22ex7.6B PRODUCT SPECIFICATIONS

	In normal(4:3)mode		In 16:9 mode	
	1×	2×	1×	2×
Focal Length	7.6-168mm	15.2-336mm	7.6-168mm	15.2-336mm
Zoom Ratio	22×			
Maximum Relative Aperture	1:1.8(7.6-114.1mm) 1:2.65(168mm)	1:3.6(15.2-228.2mm) 1:5.3(336mm)	1:1.8(7.6-114.1mm) 1:2.65(168mm)	1:3.6(15.2-228.2mm) 1:5.3(336mm)
Image Format	8.8×6.6mm(Dia.11mm)		9.6×5.4mm(Dia.11mm)	
Angular Field of View (Wide) (Tele)	60.1° ×46.9° 3.00° ×2.25°	32.3° ×24.5° 1.5° ×1.13°	64.6° ×39.1° 3.27° ×1.84°	35.1° ×20.1° 1.64° ×0.92°
Minimum Object distance (M.O.D)	0.85m (from the lens vertex)			
Object Dimensions at M.O.D (Wide) (Tele)	92.5×69.4cm 4.25×3.19cm	46.3×34.7cm 2.13×1.6cm	100.6×56.6cm 4.6×2.6cm	50.3×28.4cm 2.3×1.3cm

	In switchable (4 : 3) mode	
	1×	2.4×
Focal Length	6.3-139mm	15.2-336mm
Zoom Ratio	22×	
Maximum Relative Aperture	1:1.8(6.3-114.2mm) 1:2.19(139mm)	1:3.6(15.2-228.2mm) 1:5.3(336mm)
Image Format	7.2×5.4mm(Dia.9mm)	
Angular Field of View (Wide) (Tele)	60.1° ×46.9° 3.00° ×2.25°	26.6° ×20.1° 1.22° ×0.92°
Minimum Object distance (M.O.D)	0.85m (from the lens vertex)	
Object Dimensions at M.O.D (Wide) (Tele)	92.5×69.4cm 4.25×3.19m	37.9×28.4cm 1.74×1.30cm

Flange back	48 mm (in air)
Thread for filters	94mm pitch1 (Front lens barrel Size) or 105mm pitch1 (Hood Unit Thread Size)
Zoom speed for full range	Max. 0.5 ± 0.2 s
Focus speed for full range	1.5 ± 0.3 s
Iris	Control from camera
Mount	Bayonet Mount
Power (input)	Nominal DC12V (10~17V)
Power consumption	280 mA (max.) for ("R" type lenses) 500 mA (max.) for ("A" type lenses)
Mass	approx. 1.83 kg ("IRSE" type lenses)
Operating temperature	Temperature : -20°C to + 45°C Humidity : 5% to 95%RH (no condensation)

(5) HJ21ex7.5B PRODUCT SPECIFICATIONS

	In normal(4:3)mode		In 16:9 mode	
	1×	2×	1×	2×
Focal Length	7.5-158mm	15-316mm	7.5-158mm	15-316mm
Zoom Ratio	21×			
Maximum Relative Aperture	1:1.9(7.5-116mm) 1:2.6(158mm)	1:3.8(15-232mm) 1:5.2(316mm)	1:1.9(7.5-116mm) 1:2.6(158mm)	1:3.8(15-232mm) 1:5.2(316mm)
Image Format	8.8×6.6mm(Dia.11mm)		9.6×5.4mm(Dia.11mm)	
Angular Field of View (Wide) (Tele)	60.8° ×47.5° 3.2° ×2.4°	32.7° ×24.8° 1.6° ×1.2°	65.2° ×39.6° 3.5° ×2.0°	35.5° ×20.4° 1.7° ×1.0°
Minimum Object distance (M.O.D)	0.85m (from the lens vertex)			
Object Dimensions at M.O.D (Wide) (Tele)	110.1×82.6cm 5.1×3.8cm	55.1×41.3cm 2.6×1.9cm	120.4×67.7cm 5.6×3.2cm	60.2×33.9cm 2.8×1.6cm

	In switchable (4 : 3) mode	
	1×	2.4×
Focal Length	6.2-130mm	15-316mm
Zoom Ratio	21×	
Maximum Relative Aperture	1:1.9(6.2-116mm) 1:2.15(130mm)	1:3.8(15-232mm) 1:5.2(316mm)
Image Format	7.2×5.4mm(Dia.9mm)	
Angular Field of View (Wide) (Tele)	60.8° ×47.5° 3.2° ×2.4°	27.0° ×20.4° 1.3° ×1.0°
Minimum Object distance (M.O.D)	0.85m (from the lens vertex)	
Object Dimensions at M.O.D (Wide) (Tele)	110.1×82.6cm 5.1×3.8m	44.7×33.5cm 2.1×1.6cm

Flange back	48 mm (in air)
Thread for filters	127mm pitch0.75 (Hood Unit Thread Size)
Zoom speed for full range	Max. 0.5 ± 0.2 s
Focus speed for full range	1.5 ± 0.3 s
Iris	Control from camera
Mount	Bayonet Mount
Power (input)	Nominal DC12V (10~17V)
Power consumption	280 mA (max.) for ("R" type lenses)
	500 mA (max.) for ("A" type lenses)
Mass	approx. 2.63 kg ("IRSE" type lenses)
Operating temperature	Temperature : -20°C to + 45°C
	Humidity : 5% to 95%RH (no condensation)

Reference : Lens Designation (For Portable Type Zoom Lens)

A Canon TV zoom lens model name is designated by image size, zoom ratio, focal length at wide end, operation system (focus, zoom and iris), and other information as shown below.

Ex.) J 22e × 7.6 B4 I R S D - C

① Image Size & Applicable Camera
② Zoom Ratio
③ Focal Length at Wide End
④ Prism Compensation
⑤ Extender
⑥ Focus & Zoom Operation System
⑦ Iris Operation System
⑧ Special Feature (1)
⑨ Special Feature (2)

① Image Size & Applicable Camera
- J : 11mm Dia. & for 2/3″ SDTV portable camera
- HJ : 11mm Dia. & for 2/3″ HDTV portable camera
- YJ : 11mm Dia. & for 2/3″ Pro-video portable camera
- H : 8mm Dia. & for 1/2″ SDTV portable camera
- YH : 8mm Dia. & for 1/2″ Pro-video portable camera

② Zoom Ratio
- 17 : 17x zoom
- 22 : 22x zoom

③ Focal Length at Wide End
- 7.7 : 7.7 mm
- 7.6 : 7.6 mm

④ Prism Compensation
- B : Compensated for prism*
- B3 : Compensated for 2/3″ B3 prism
- B4 : Compensated for 2/3″ B4 prism
- C : Without prism compensation

(*In case of 1/2″ prism, designation for prism compensation may be omitted, since only one type of prism exists.)

⑤ Extender
- I : Built-in extender (s)
- K : No Built-in extender
- V : No Built-in extender Built-in COU* unit
- W : Built-in extender (s) and COU* unit

*COU : Crossover unit

⑥ Focus & Zoom Operation System
- A — Focus : Manual (with built-in motor for servo); Zoom : Servo/Manual
- L — Focus : Manual (Rotation); Zoom : Manual (Rotation)
- R — Focus : Manual; Zoom : Servo/Manual
- T — Focus : Servo (speed/position); Zoom : Servo (speed/position)

⑦ Iris Operation System
- L : Manual
- S : Servo

⑧ Special Feature (1)
- (none) : No special feature
- D : Digital servo
- E : Digital servo with built-in encoder

⑨ Special Feature (2)
- (none) : No special feature*
- A : Pro-video shuttle shot
- C : Clutch-less
- V : Anti-vibration function included

(*In case of no special feature (2), hyphen (-) will also be omitted.)

9.ACCESSORIES (SOLD SEPARATELY)

To maximize the performance of the lens and provide more flexibility in operation, Canon provides the following accessories (sold separately). Refer to the operation manual for the respective accessory for the installation, connection, and operating procedures. Also, when using a conventional zoom servo demand or servo glip which has no {Shtl} switch and {FRM1} switch, these switch functions can be allocated to {VTR} switch or {RET} switch by setting at the information display.

AVAILABLE ACCESSORIES

Description	Unit	HJ11ex4.7B	HJ17ex7.7B	HJ17ex7.6B	HJ22ex7.6B	HJ21ex7.5B
	Hood Unit Thread Size	127mm P0.75	105mm P1	—	105mm P1	127mm P0.75
	Lens Barrel Thread Size	—	94mm P1	82mm P0.75	94mm P1	—
	Front Lens Diameter	—	φ98mm	φ85mm	φ98mm	—
Control Accessories						
Recommended Accessories						
Flexible Focus Control Unit	FFC-200	●	●	●	●	●
Flexible Zoom Control Unit	FZC-100	●	●	●	●	●
32"Flexible Cable	FC-40	●	●	●	●	●
Flexible Focus Module	FFM-100	●	●	●	●	●
Flexible Dual Module	FFM-200	●	●	●	●	●
Focus Servo Demand For Digital Drive	FPD-400D	●	●	●	●	●
Focus Module For Digital Drive	FPM-420D	●	●	●	●	●
Zoom Servo Demand For digital Drive	ZSD-300D	●	●	●	●	●
Zoom Servo Grip	ZSG-200M	●	●	●	●	●
Zoom Grip Adapter	ZGA-400				●	●
Zoom Grip Adapter	ZGA-500	●	●	●		
Extension Cable	EC-80	●	●	●	●	●
Other Useable Accessories						
Focus Positional Servo Module	FPM-420	●	●	●	●	●
Focus Positional Servo Demand	FPD-400	●	●	●	●	●
Zoom Servo Demand	ZSD-300M	●	●	●	●	●
Zoom Servo Demand	ZSD-350M	●	●	●	●	●
Zoom Demand For digital Drive	ZSD-350D	●	●	●	●	●
Conversion Cable 20P-12P	CC-2012	●	●	●	●	●
Conversion Cable 20P-6P	CC-2006	●	●	●	●	●
Optical Accessories						
1.5×Tele-Side Converter	T15HD		● (*1)	● (*2)	● (*1)	
0.8×Wide Converter	W80HD		● (*1)	● (*2)	● (*1)	
0.75×Wide Attachment	WA75HD		● (*1)	● (*2)	● (*1)	
85mm Adaptor II	ADAPTOR85II			●		
98mm Adaptot II	ADAPTOR98II		●		●	
UV (Ultra Violet) Filter 127mm	UV/127P0.75	●				●
UV(Ultra Violet) Filter 105mm	UV/105P1		●		●	
UV(Ultra Violet) Filter 94mm	UV94P1		●		●	
UV(Ultra Violet) Filter 82mm	UV/82P0.75			●		
Skylight Filter 105mm	SKY/105P1		●		●	
Skylight Filter 82mm	SKY82P0.75			●		
Cross Screen Filter 127mm	CRS/127P0.75	●				●
Cross Screen Filter 105mm	CRS/105P1		●		●	
Cross Screen Filter 82mm	CRS/82P0.75			●		
Snow Cross Filter 127mm	SNW/127P0.75	●				●
Snow Cross Filter 105mm	SNW/105P1		●		●	
Snow Cross Filter 82mm	SNW/82P0.75			●		
Sunny Cross Filter 127mm	SNY/127P0.75	●				●
Sunny Cross Filter 105mm	SNY/105P1		●		●	
Sunny Cross Filter 82mm	SNY/82P0.75			●		
Polarized Filter 127mm	PL/127P0.75	●				●
Polarized Filter 105mm	PL105P1		●		●	
Polarized Filter 82mm	PL82P0.75			●		
Softon Filter 127mm	SFT/127P0.75	●				●
Softon Filter 105mm	SFT/105P1		●		●	
Softon Filter 82mm	SFT82P0.75			●		
ND8 Filter 127mm	ND8/127P0.75	●				●
ND4 Filter 82mm	ND4/82P0.75			●		
ND8 Filter 105mm	ND8/105P1		●		●	
ND8 Filter 82mm	ND8/82P0.75			●		

● : Usable Accessories

(*1) : These accessories require the ADAPTOR 98II. In additiion these optical accessories can not be used to gether with 94mm filter and 105mm filter.

(*2) : These accessories require the ADAPTOR 85II. In additiion these optical accessories can not be used to gether with 82mm filter.

SYSTEM CONFIGURATION FOR ZOOM AND FOCUS OPERATIONS

(A) FOR TYPE "R" LENS

Select the necessary accessories for operating the zoom and focus functions from the following table.

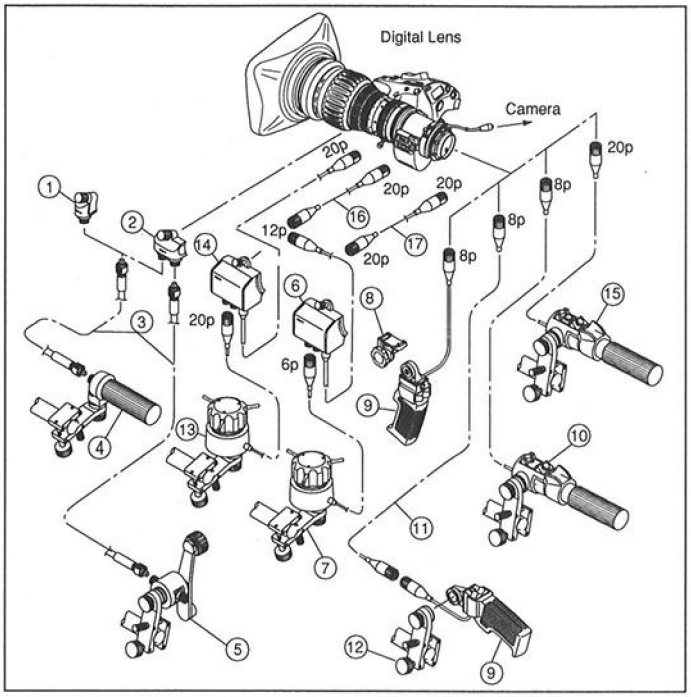

① Flexible Focus Module
② Flexible Dual (Zoom/Focus) Module
③ Flexible Cable
④ Flexible Focus Control Unit
⑤ Flexible Zoom Control Unit
⑥ Focus Positional Servo Module
⑦ Focus Positional Servo Demand Unit
⑧ Zoom Grip Adaptor
⑨ Zoom Servo Grip
⑩ Zoom Servo Demand Unit
⑪ Extension Cable
⑫ Clamp
⑬ Digital Focus Positional Servo Demand
⑭ Digital Focus Positional Module
⑮ Digital Zoom Servo Demand
⑯ Conversion Cable 20P-12P
⑰ Conversion Cable 20P-20P

Operation Systems and Required Accessories

	Focus Function		Zoom Function	
	Operation	Accessories Used	Operation	Accessories Used
Manual	Manual	None	Manual	None
	Remote Manual	②* ③④	Remote Manual	②* ③⑤
Semi-Servo	Manual	None	Servo	None
	Manual	None	Servo	⑧⑨
	Remote Manual	①③④	Remote Servo	⑨⑪⑫
	Remote Manual	①③④	Remote Servo	⑩
	Remote Manual	①③④	Remote Servo	⑮
Servo	Remote Servo	⑥⑦⑯	Remote Servo	⑨⑪⑫
	Remote Servo	⑥⑦⑯	Remote Servo	⑩
	Remote Servo	⑥⑦⑯	Remote Servo	⑮
	Remote Servo	⑬⑭	Remote Servo	⑨⑪⑫
	Remote Servo	⑬⑭	Remote Servo	⑩
	Remote Servo	⑬⑭	Remote Servo	⑮

Note : * (Flexible dual module) is only required one piece for focus and zoom manual operations.

(B) FOR TYPE "A" LENS

Select the necessary accessories for operating the zoom and focus functions from the following table.

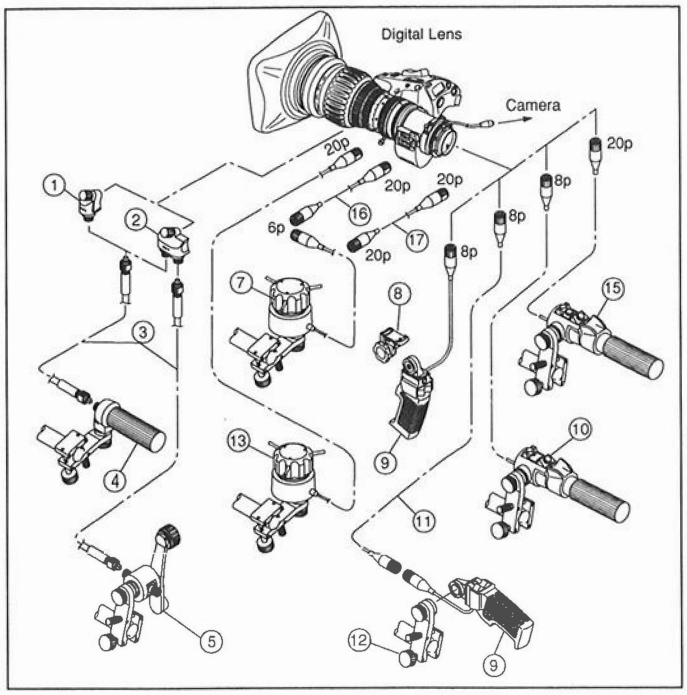

① Flexible Focus Module
② Flexible Dual (Zoom/Focus) Module
③ Flexible Cable
④ Flexible Focus Control Unit
⑤ Flexible Zoom Control Unit
⑦ Focus Positional Servo Demand Unit
⑧ Zoom Grip Adaptor
⑨ Zoom Servo Grip
⑩ Zoom Servo Demand Unit
⑪ Extension Cable
⑫ Clamp
⑬ Digital Focus Positional Servo Demand
⑮ Digital Zoom Servo Demand
⑯ Conversion Cable 20P-6P
⑰ Conversion Cable 20P-20P

Operation Systems and Required Accessories

	Focus Function		Zoom Function	
	Operation	Accessories Used	Operation	Accessories Used
Manual	Manual	None	Manual	None
	Remote Manual	②* ③④	Remote Manual	②* ③⑤
Semi-Servo	Manual	None	Servo	None
	Manual	None	Servo	⑧⑨
	Remote Manual	①③④	Remote Servo	⑨⑪⑫
	Remote Manual	①③④	Remote Servo	⑩
	Remote Manual	①③④	Remote Servo	⑮
Servo	Remote Servo	⑦⑯	Remote Servo	⑨⑪⑫
	Remote Servo	⑦⑯	Remote Servo	⑩
	Remote Servo	⑦⑯	Remote Servo	⑮
	Remote Servo	⑬	Remote Servo	⑨⑪⑫
	Remote Servo	⑬	Remote Servo	⑩
	Remote Servo	⑬	Remote Servo	⑮

Note : * (Flexible dual module) is only required one piece for focus and zoom manual operations.

資　料　集
TECHNICAL DOCUMENTS

目次 / CONTENTS

資料集として外観図および総合結線図をまとめてあります。必要に応じてご使用ください。
This technical document consists of the lens external views and their general circuit diagrams. Recommended to refer them whenever required.

1. 外観図 / EXTERNAL VIEW

(1) HJ11ex4.7B IRSE T2
(2) HJ11ex4.7B IASE T3
(3) HJ11ex4.7B WRSE T4
(4) HJ11ex4.7B WASE T5
(5) HJ11ex4.7B VRSE T6
(6) HJ11ex4.7B VASE T7
(7) HJ17ex7.7B IRSE T8
(8) HJ17ex7.7B IASE T9
(9) HJ17ex7.7B WRSE T10
(10) HJ17ex7.7B WASE T11
(11) HJ17ex7.7B VRSE T12
(12) HJ17ex7.7B VASE T13
(13) HJ17ex7.6B IRSE T14
(14) HJ17ex7.6B IASE T15
(15) HJ17ex7.6B WRSE T16
(16) HJ17ex7.6B WASE T17
(17) HJ17ex7.6B VRSE T18
(18) HJ17ex7.6B VASE T19
(19) HJ22ex7.6B IRSE T20
(20) HJ22ex7.6B IASE T21
(21) HJ22ex7.6B WRSE T22
(22) HJ22ex7.6B WASE T23
(23) HJ22ex7.6B VRSE T24
(24) HJ22ex7.6B VASE T25
(25) HJ21ex7.5B IRSE T26
(26) HJ21ex7.5B IASE T27
(27) HJ21ex7.5B WRSE T28
(28) HJ21ex7.5B WASE T29
(29) HJ21ex7.5B VRSE T30
(30) HJ21ex7.5B VASE T31

2. 総合結線図 / GENERAL CIRCUIT DIAGRAM

(1) IRSE T32
(2) IASE T33
(3) WRSE T34
(4) WASE T35
(5) VRSE T36
(6) VASE T37

1. 外観図 / EXTERNAL VIEW

(1) HJ11ex4.7B IRSE

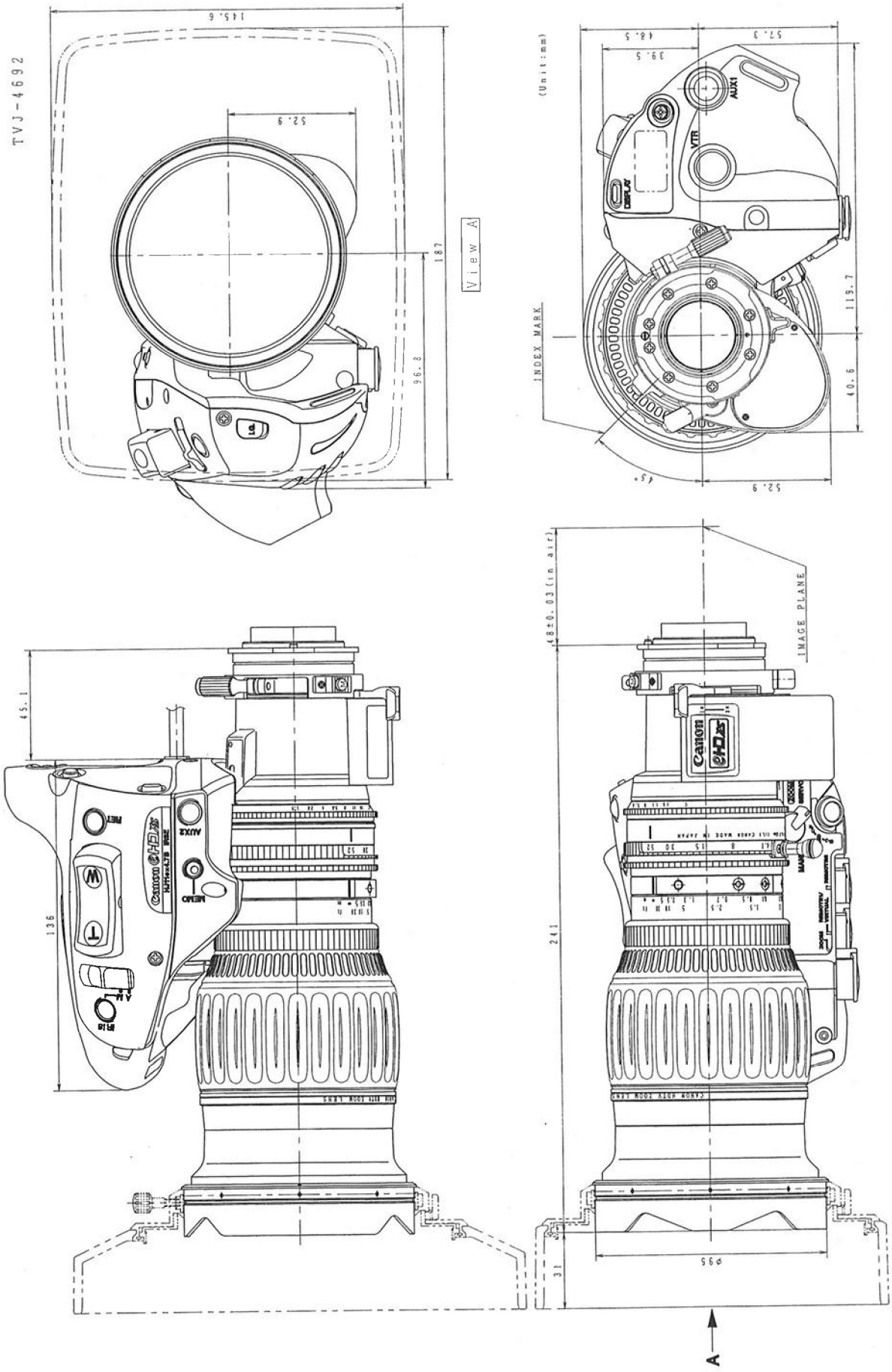

(2) HJ11ex4.7B IASE

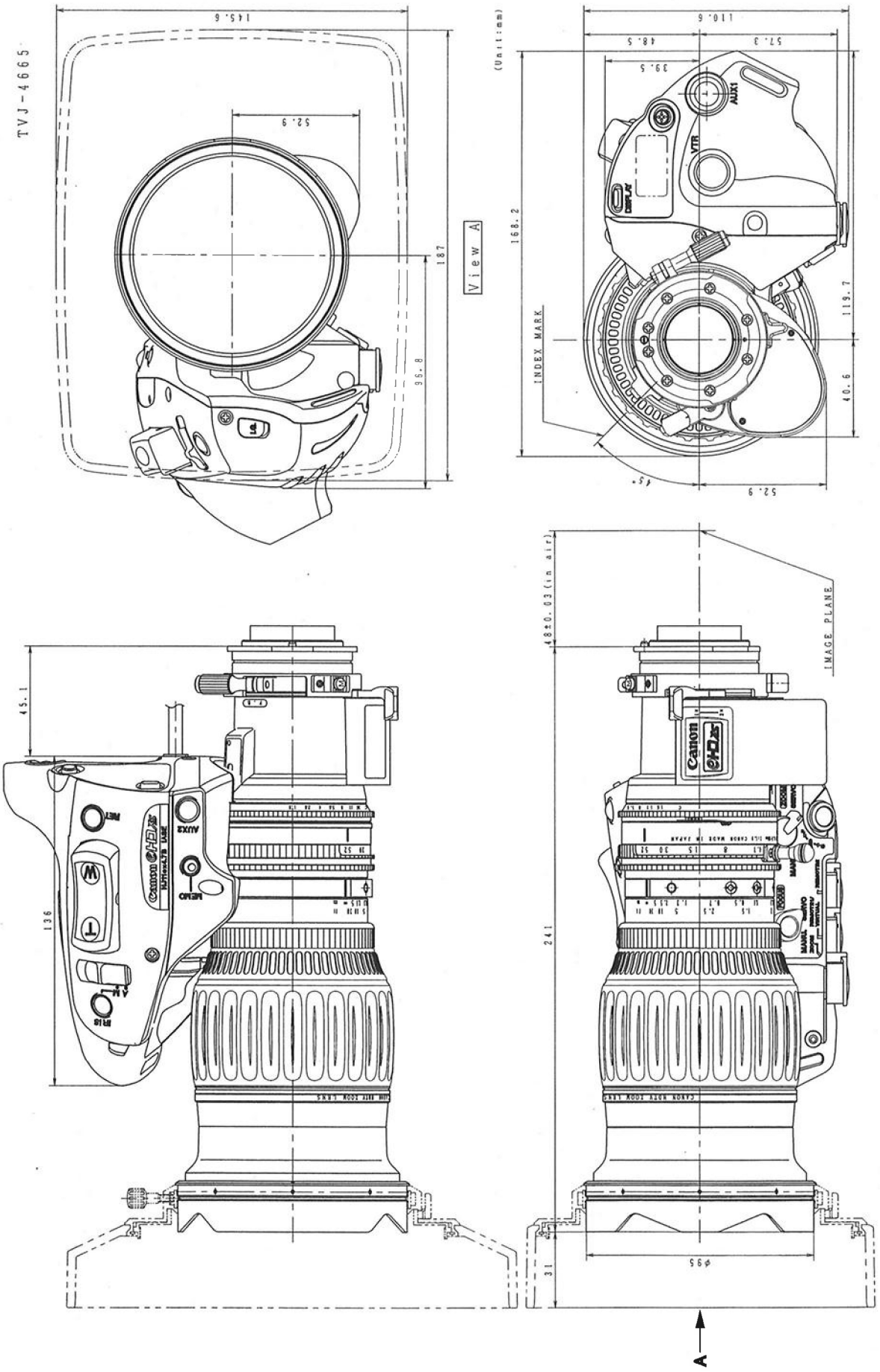

(3) HJ11ex4.7B WRSE

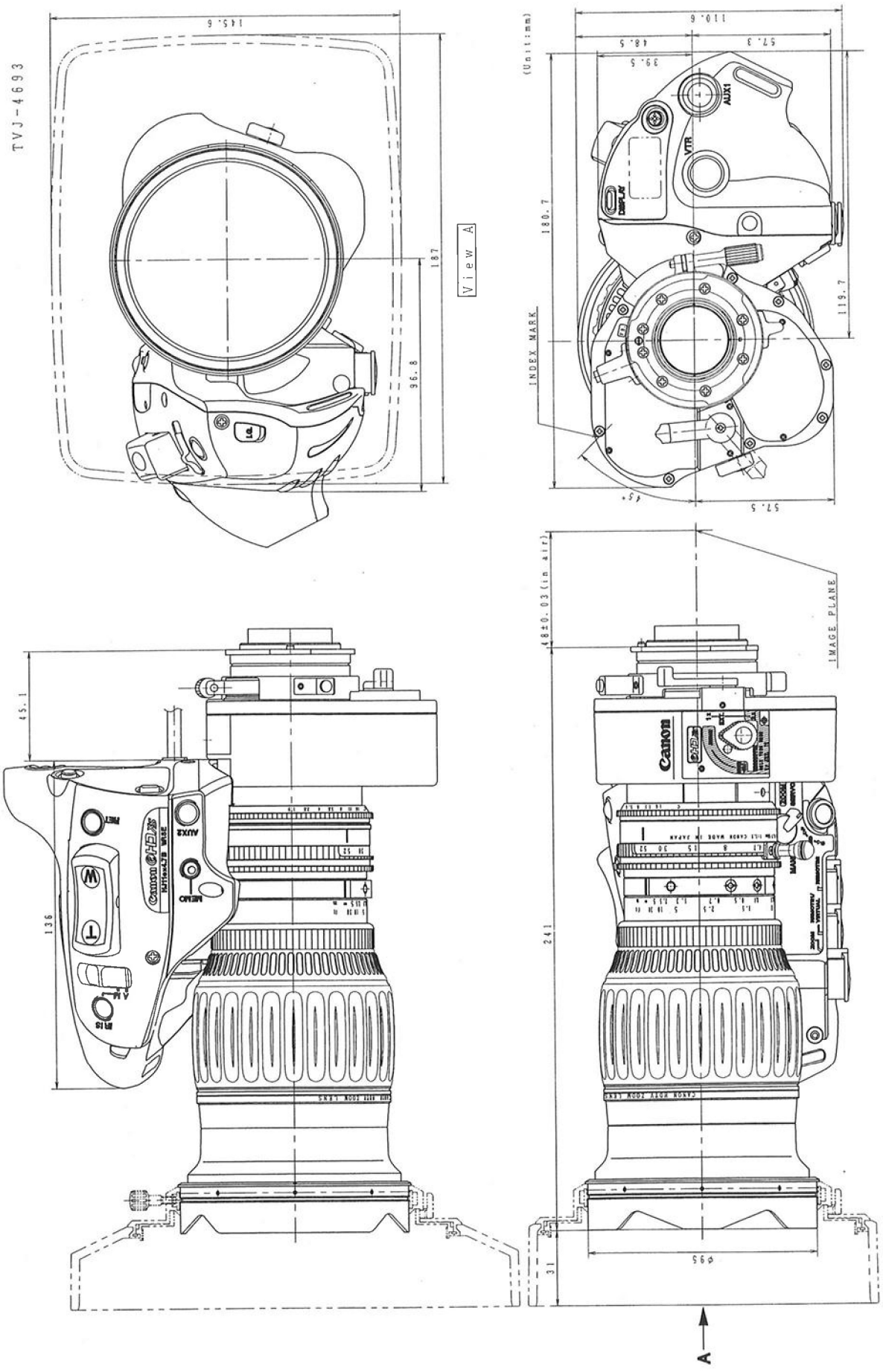

(4) HJ11ex4.7B WASE

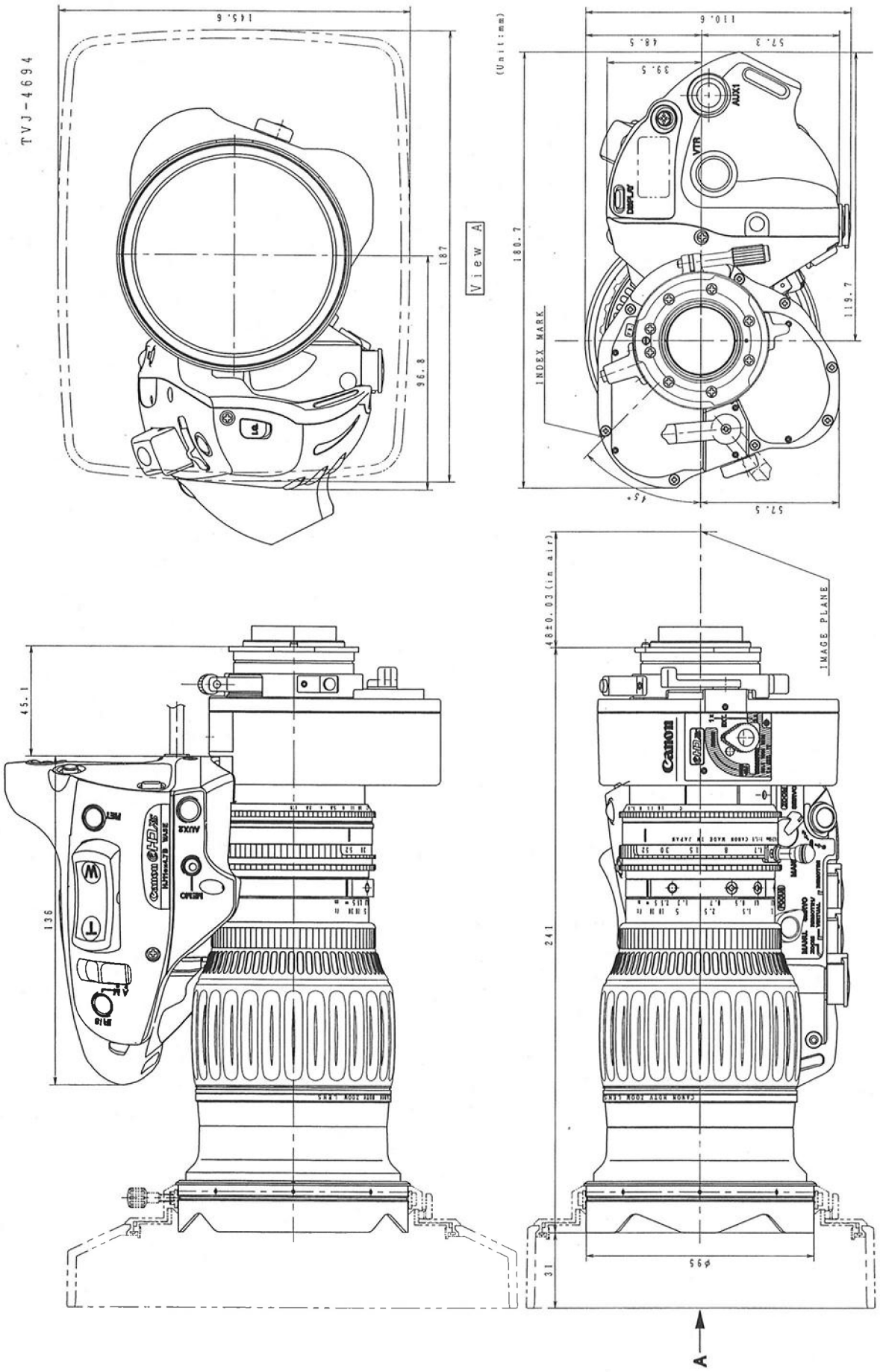

(5) HJ11ex4.7B VRSE

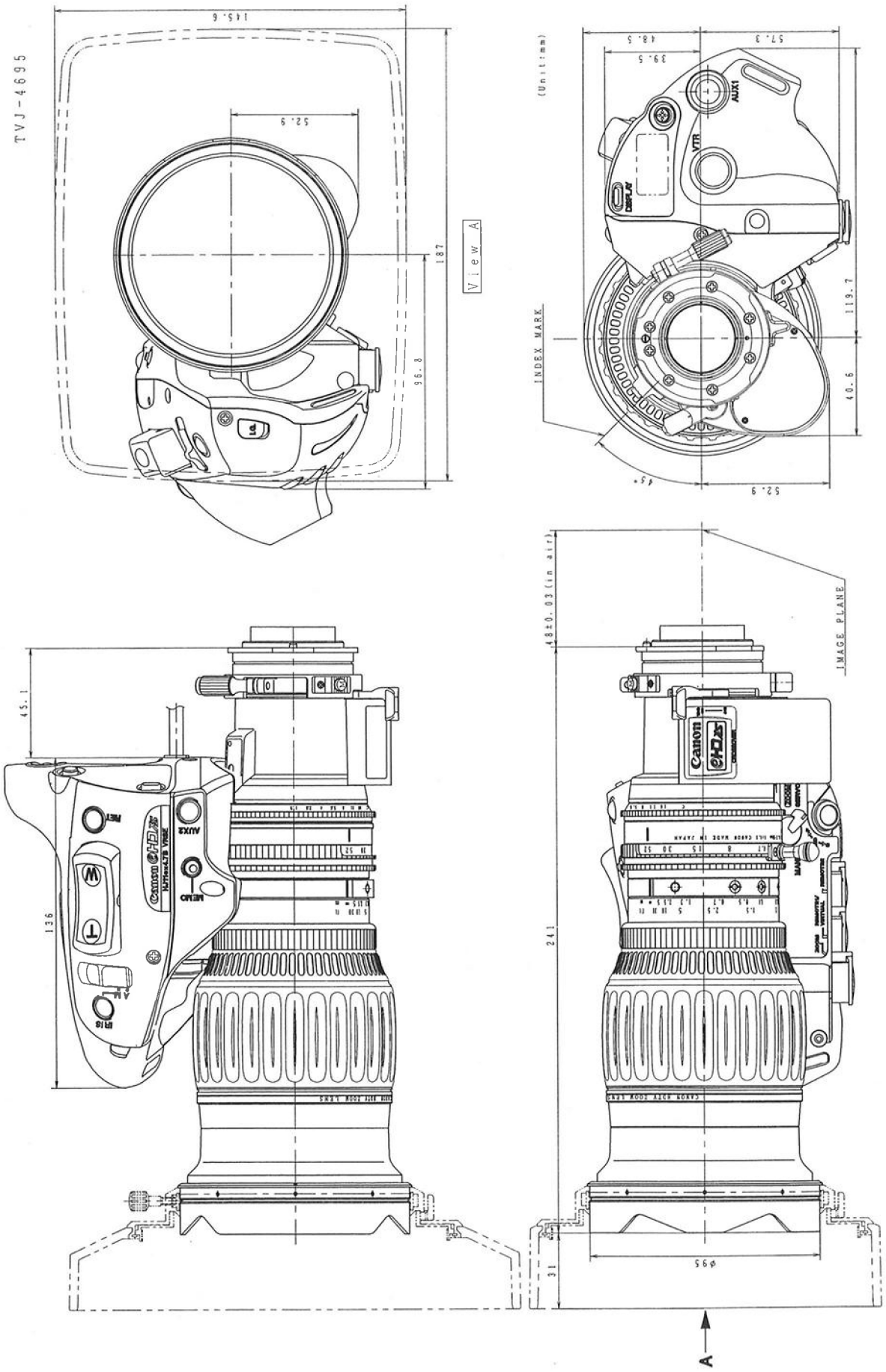

(6) HJ11ex4.7B VASE

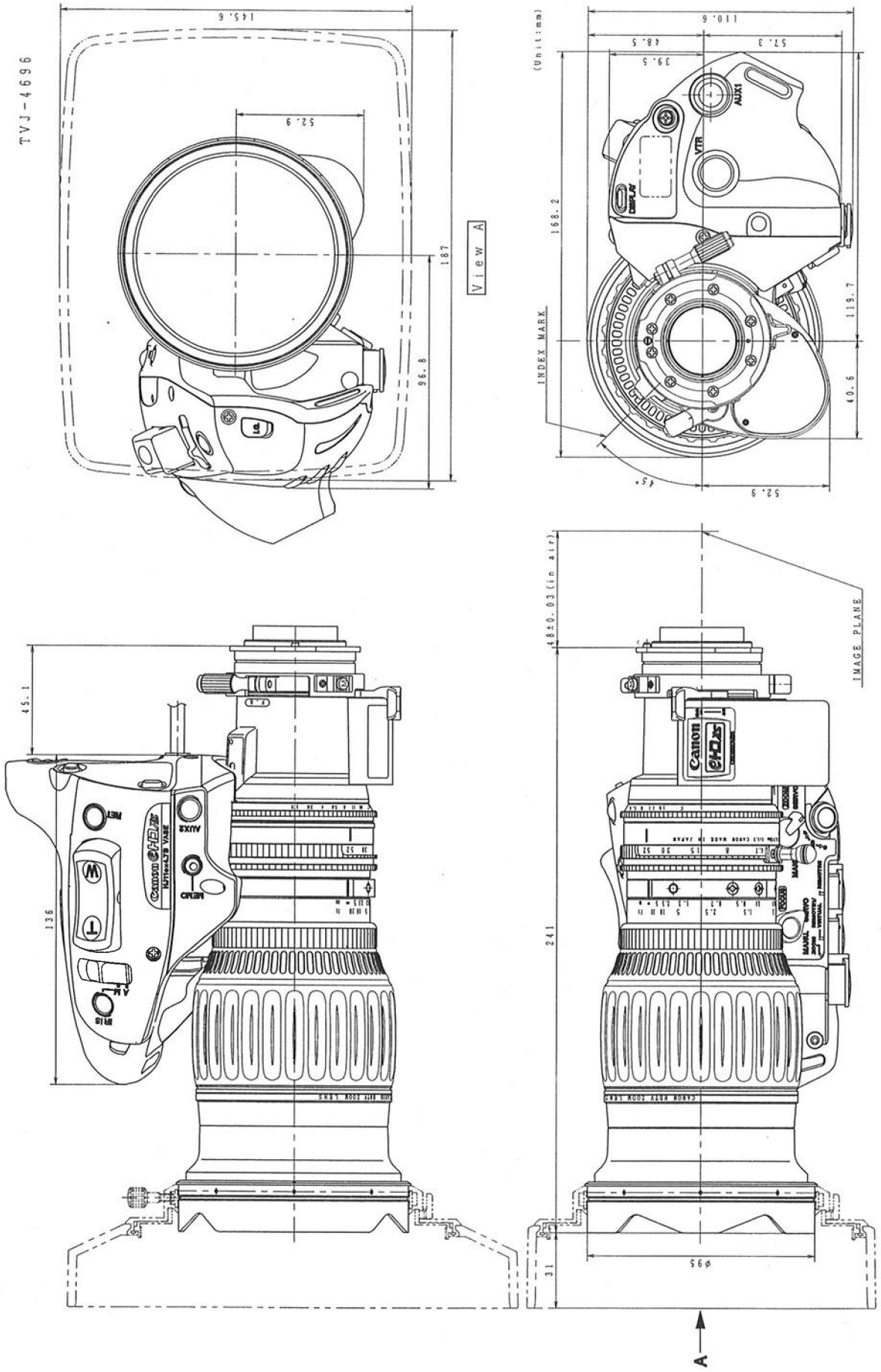

(7) HJ17ex7.7B IRSE

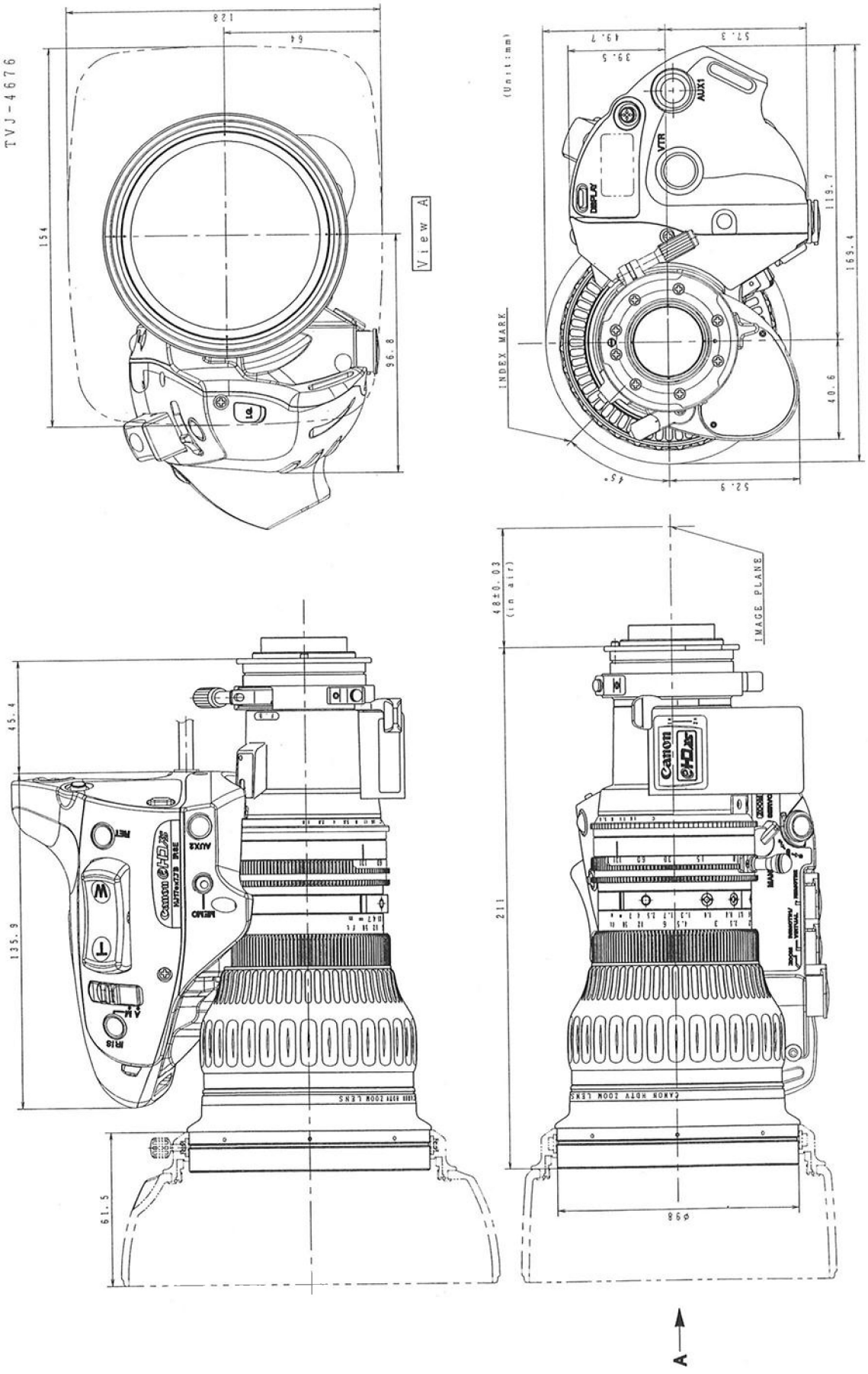

(8) HJ17ex7.7B IASE

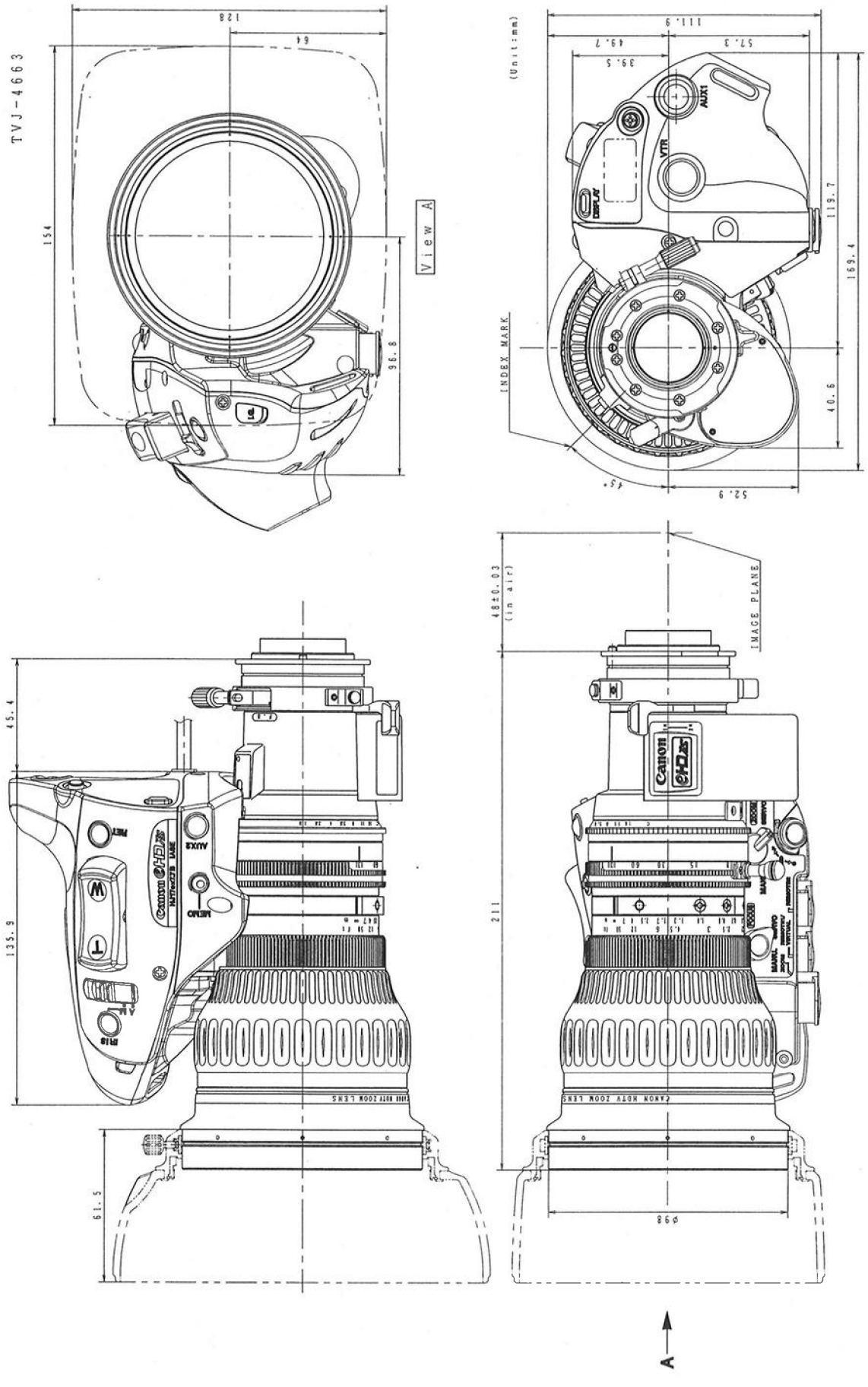

(9) HJ17ex7.7B WRSE

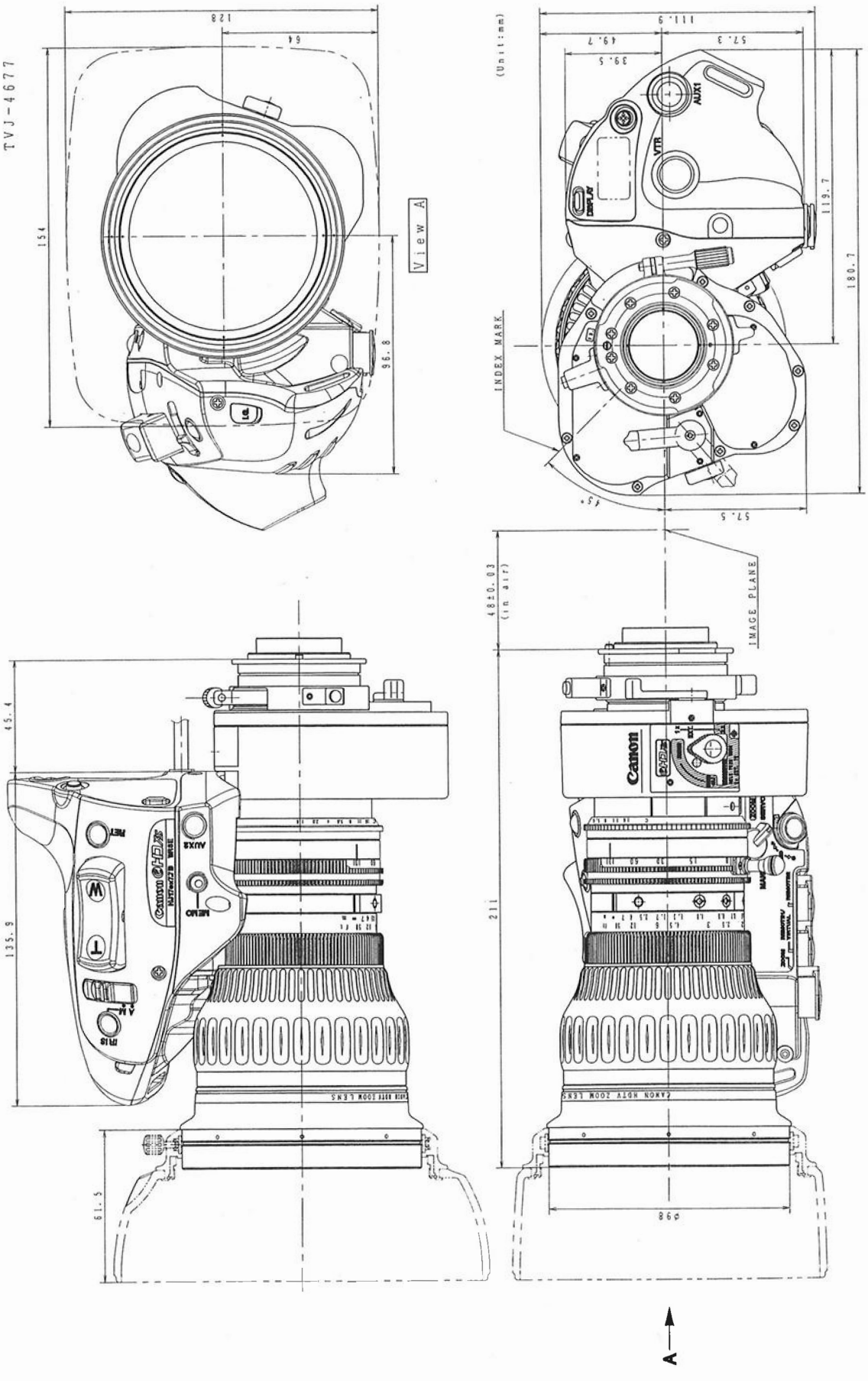

(10) HJ17ex7.7B WASE

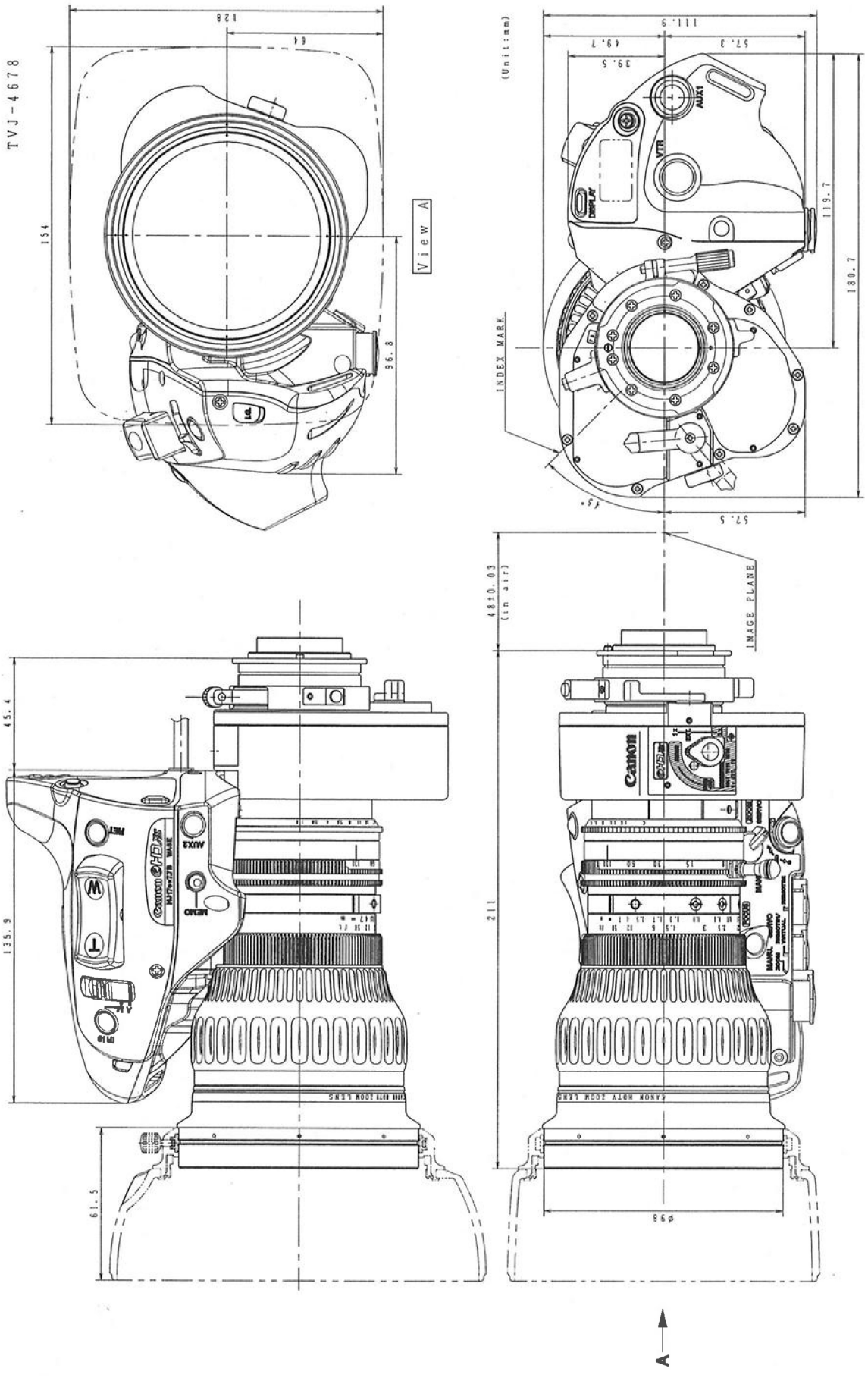

(11) HJ17ex7.7B VRSE

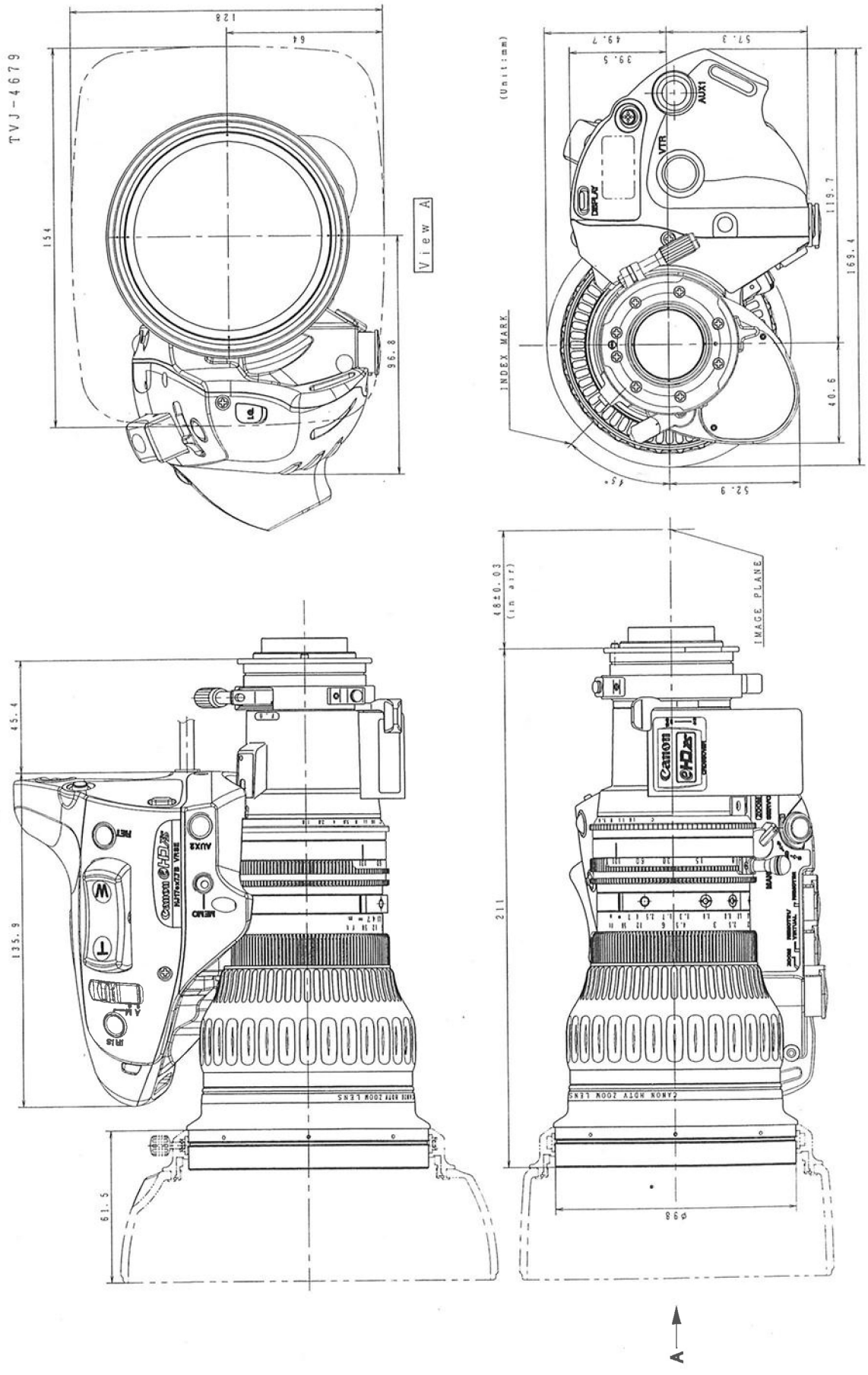

(12) HJ17ex7.7B VASE

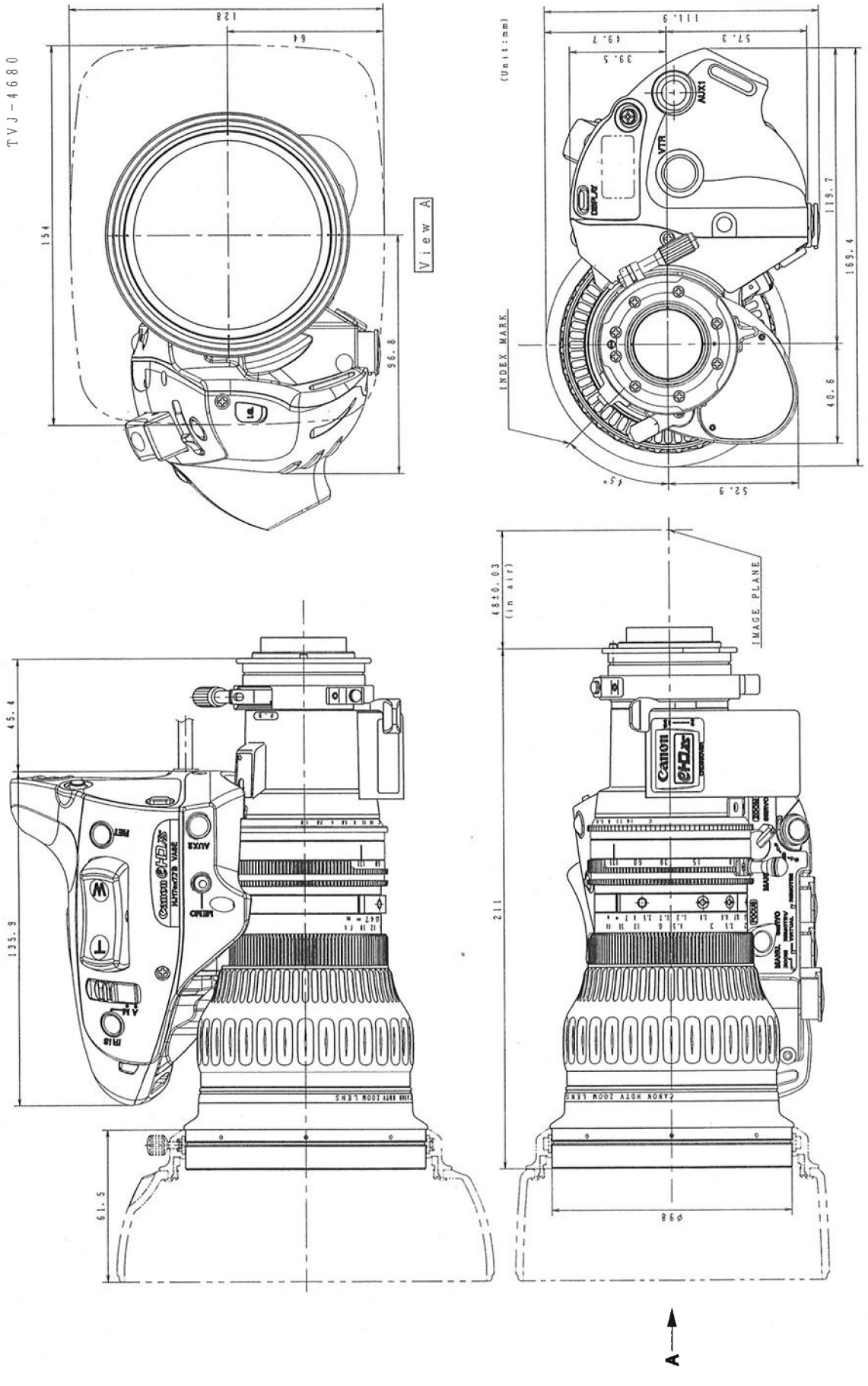

(13) HJ17ex7.6B IRSE

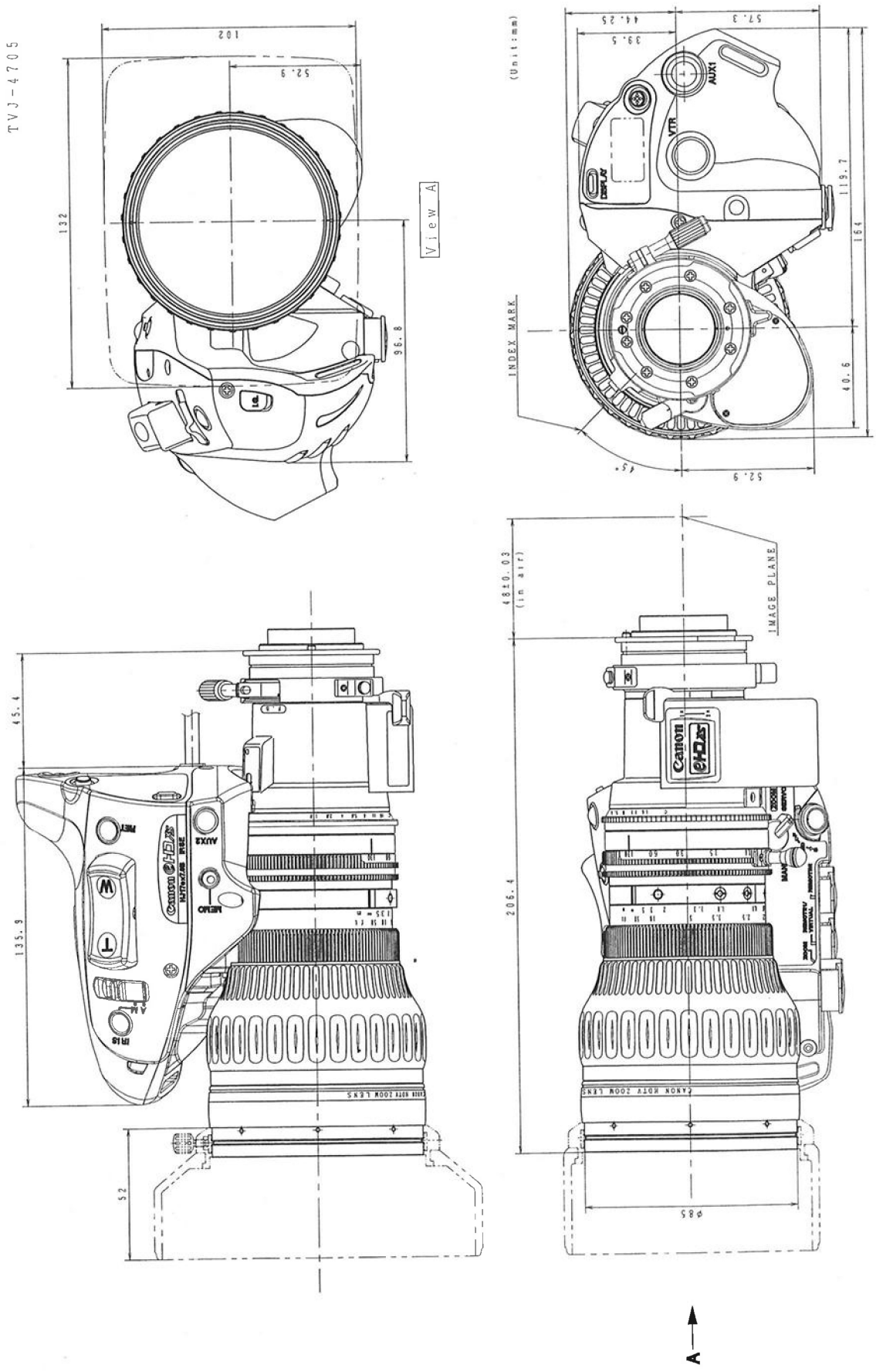

(14) HJ17ex7.6B IASE

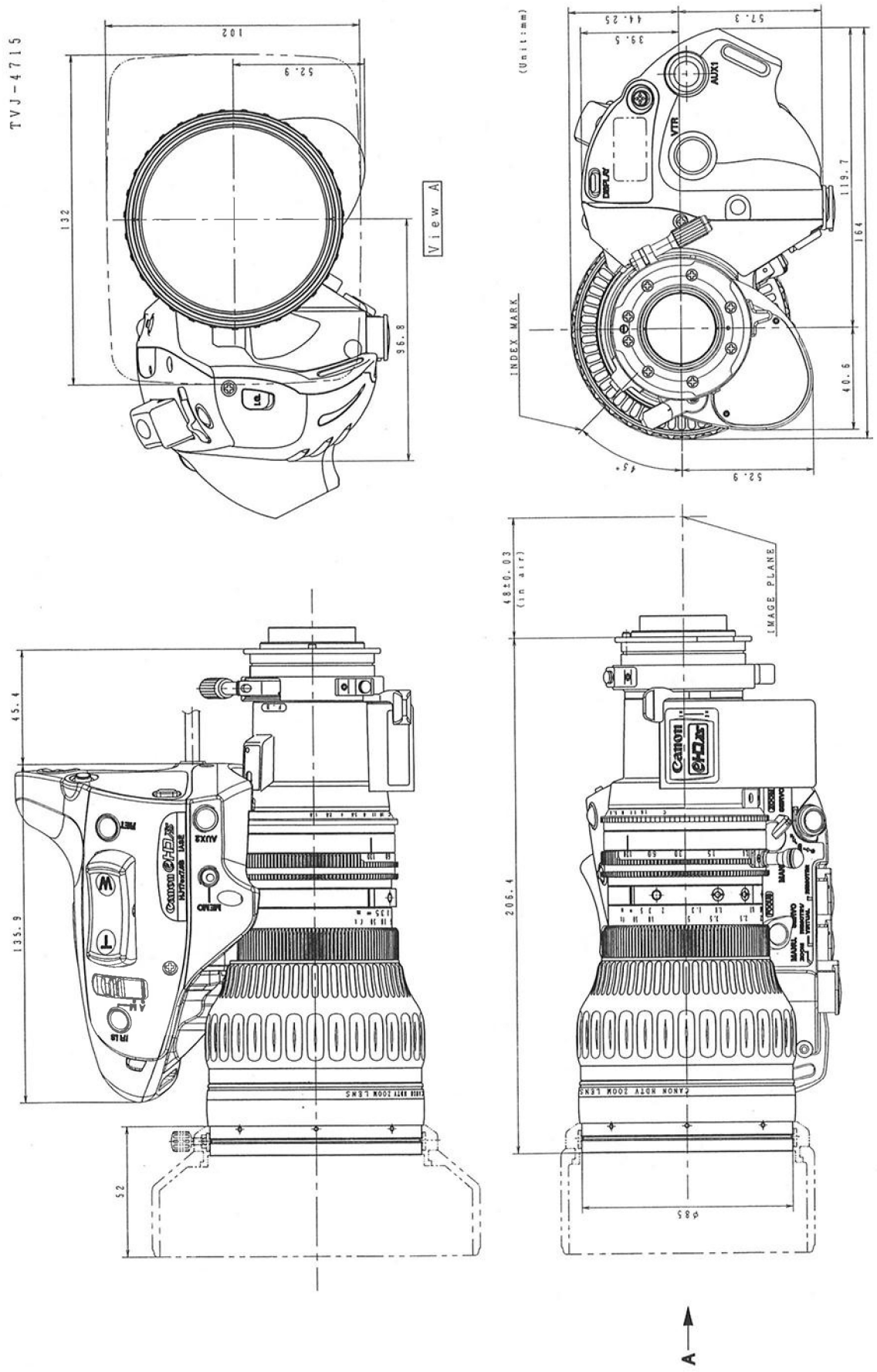

(15) HJ17ex7.6B WRSE

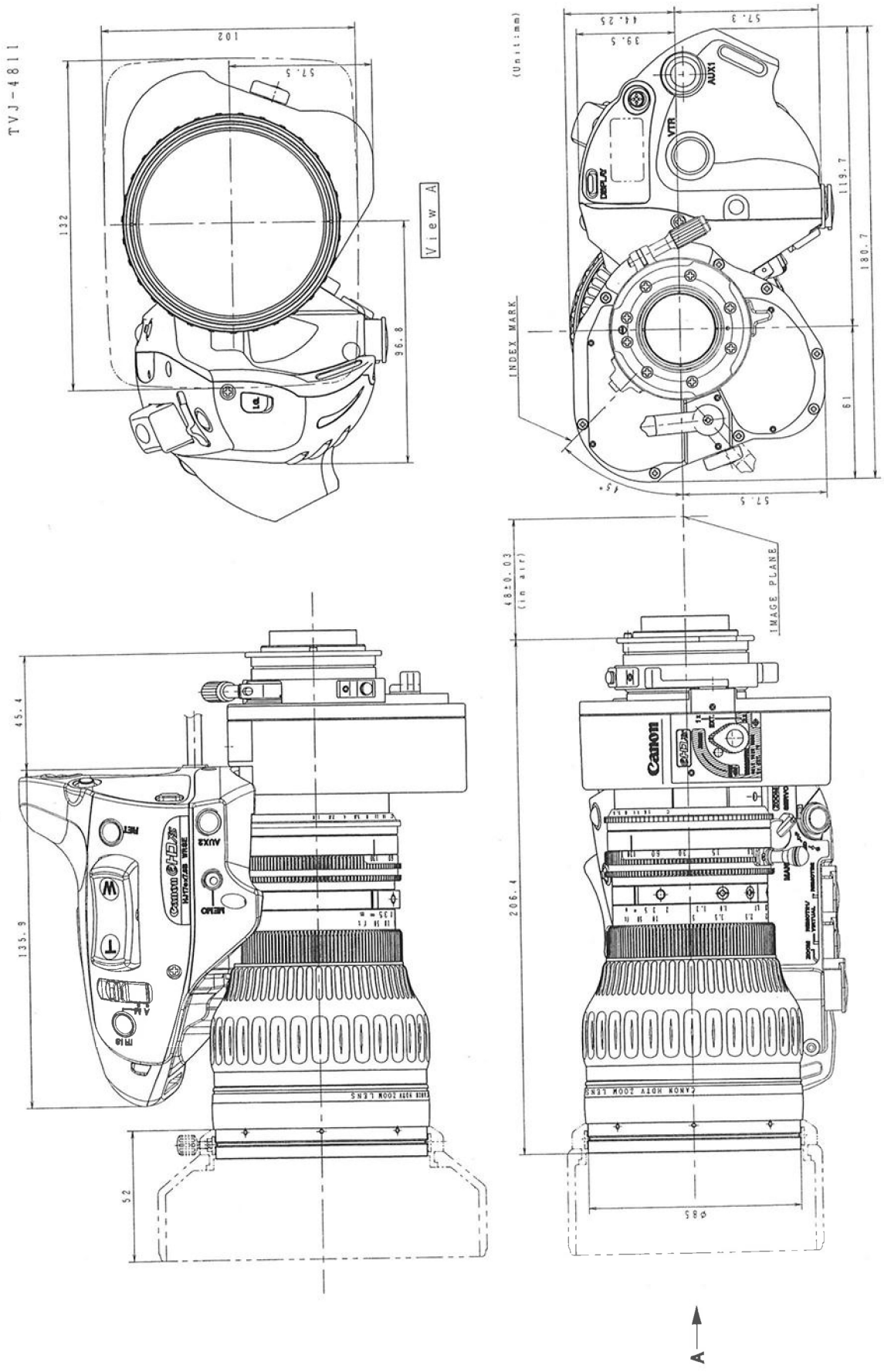

(16) HJ17ex7.6B WASE

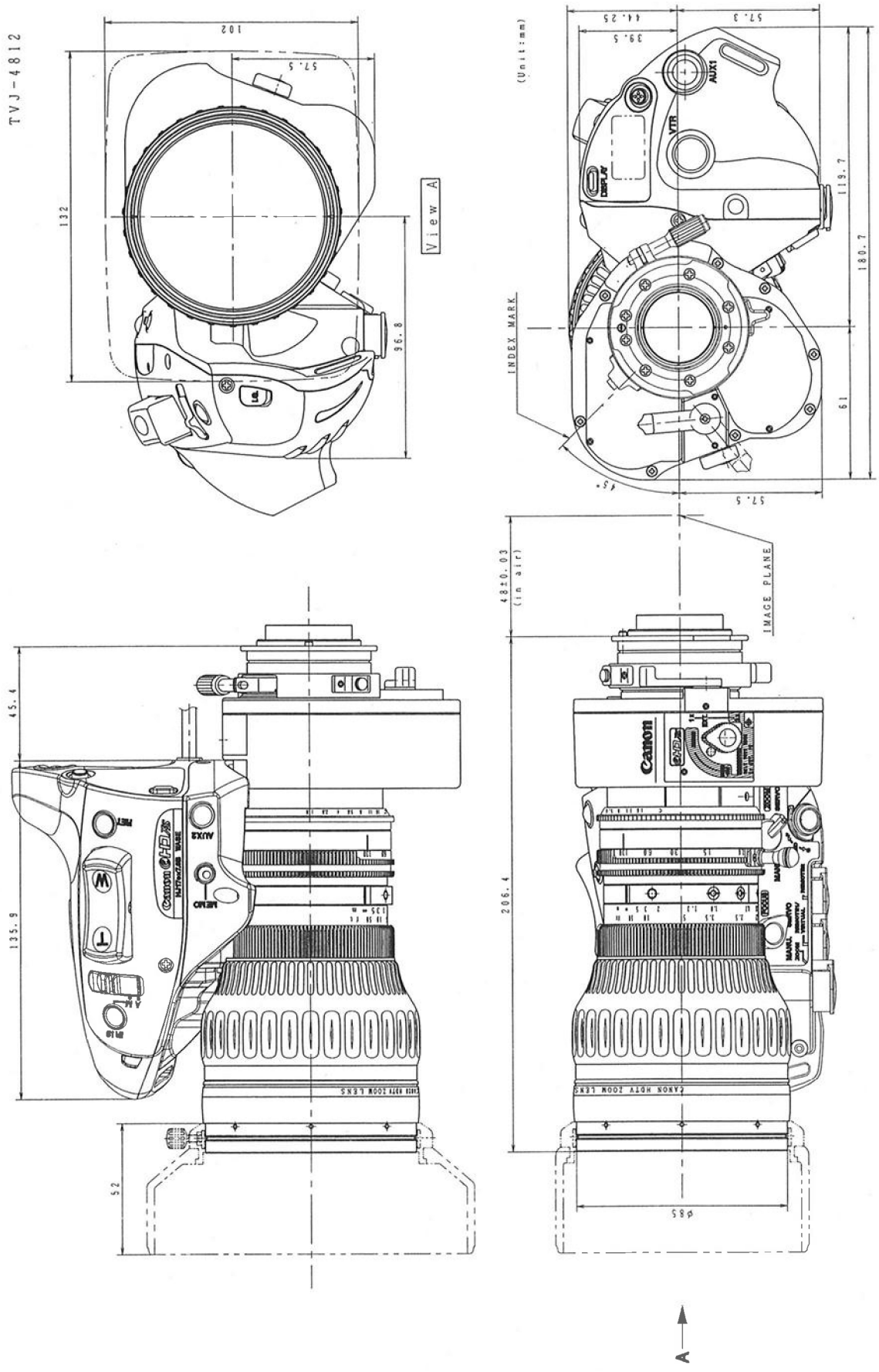

(17) HJ17ex7.6B VRSE

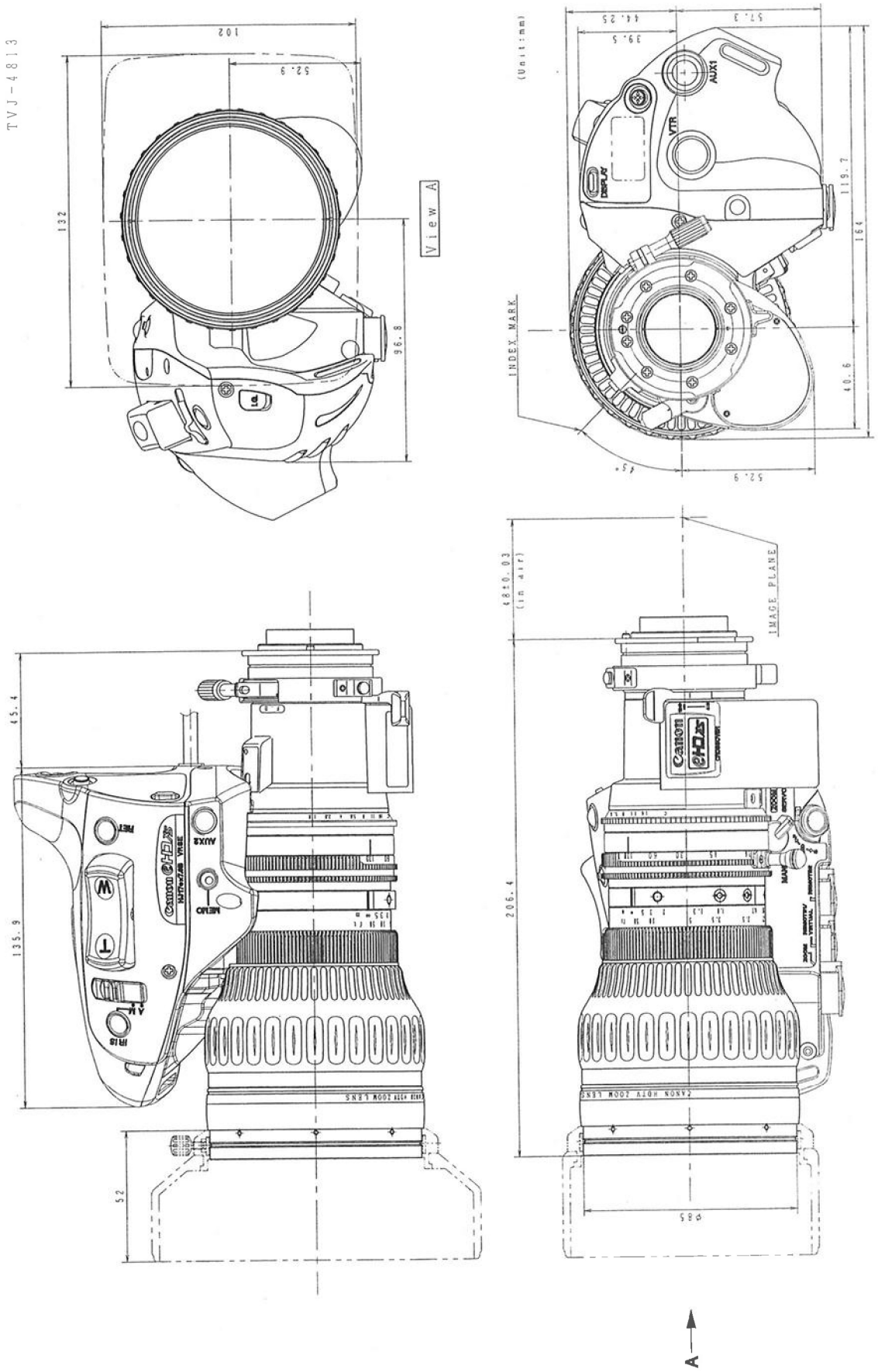

(18) HJ17ex7.6B VASE

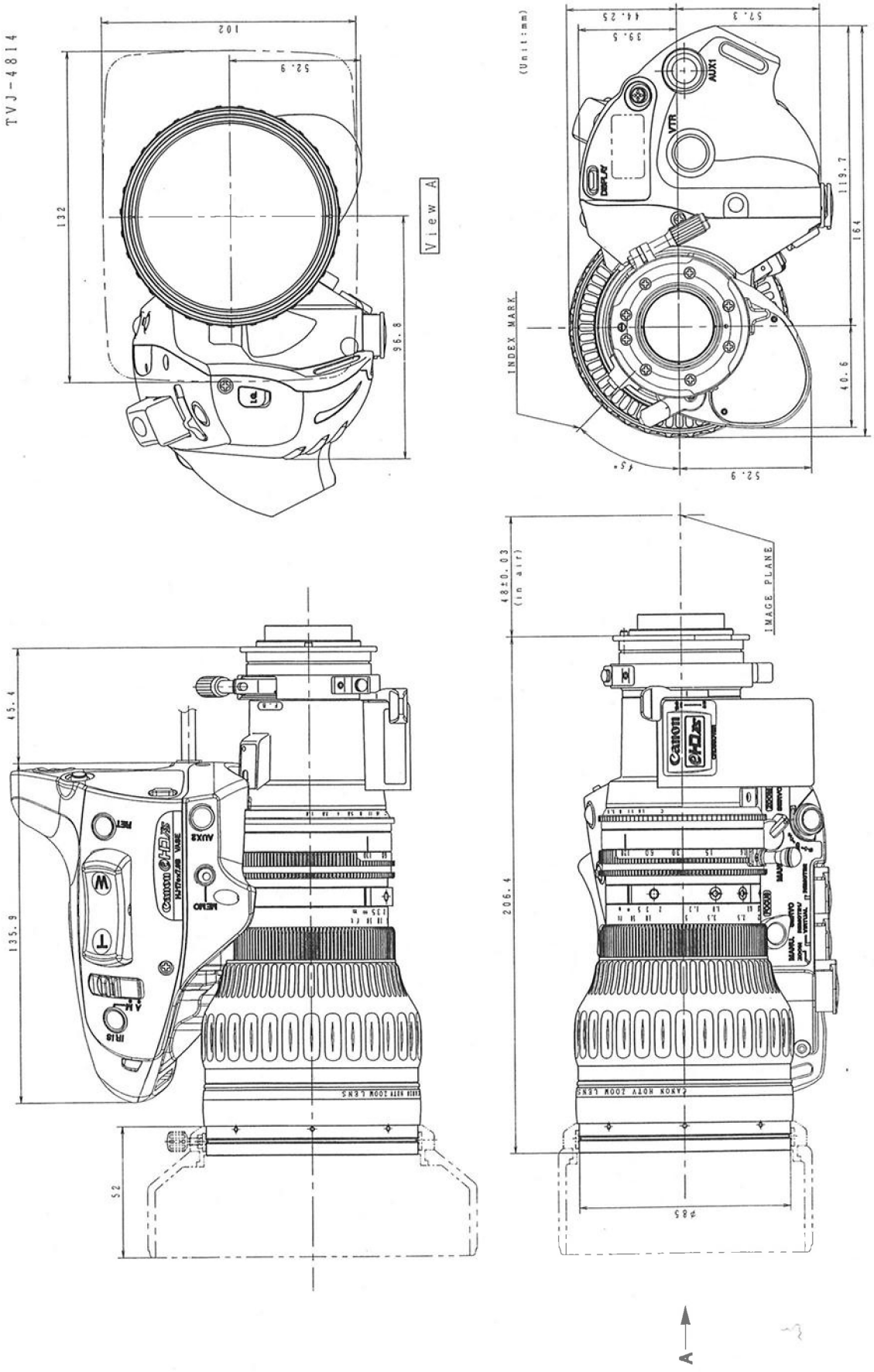

(19) HJ22ex7.6B IRSE

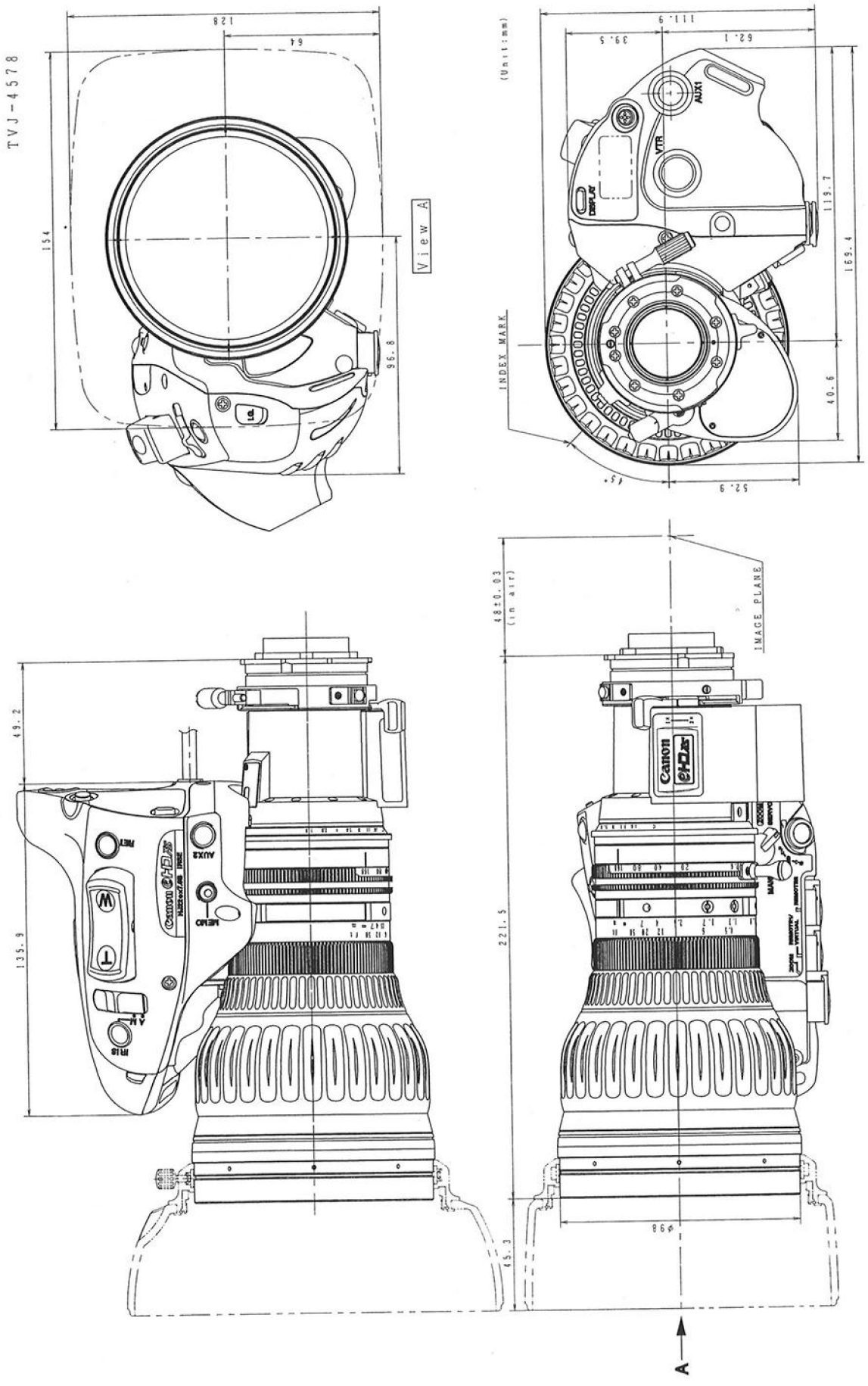

(20) HJ22ex7.6B IASE

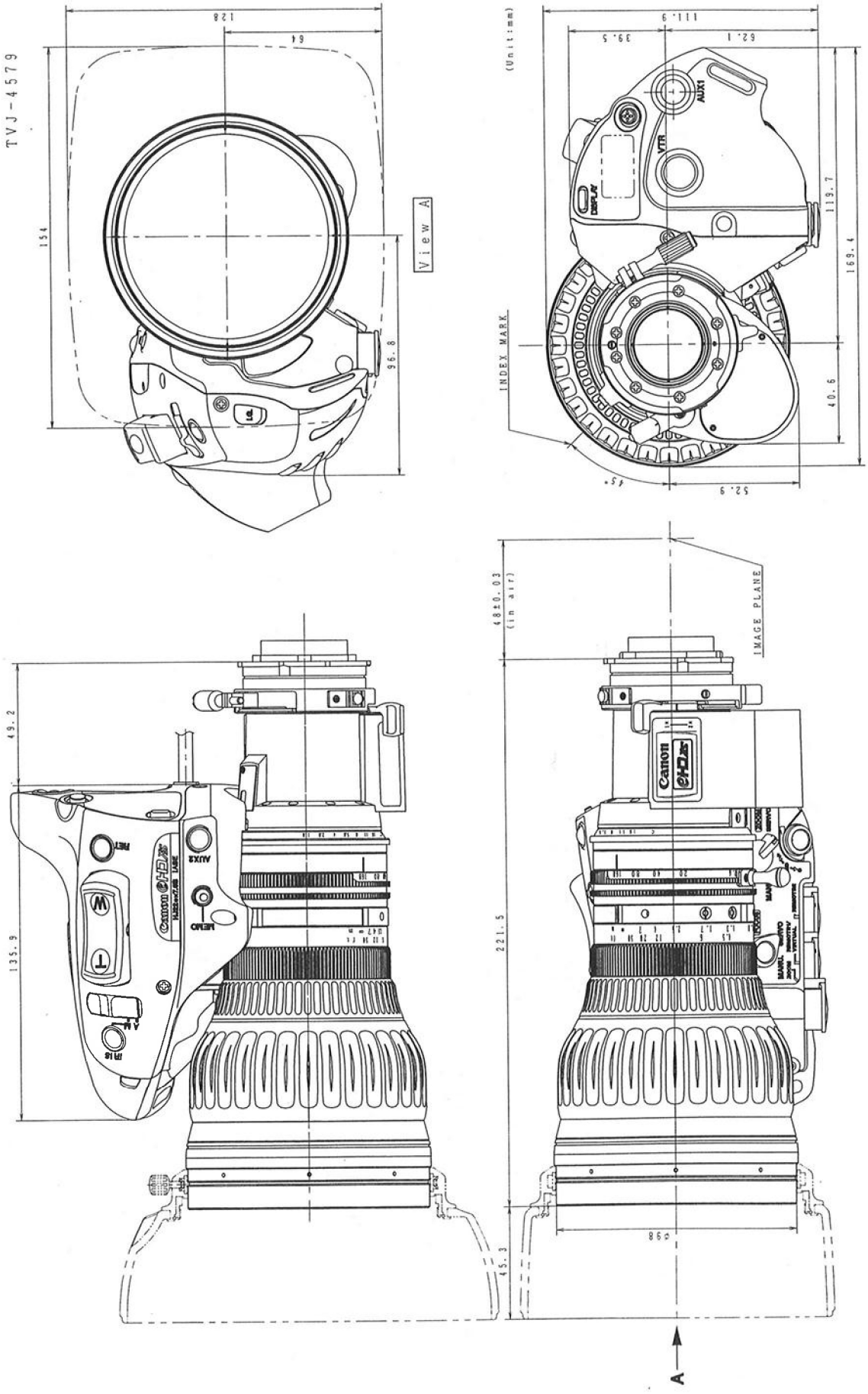

(21) HJ22ex7.6B WRSE

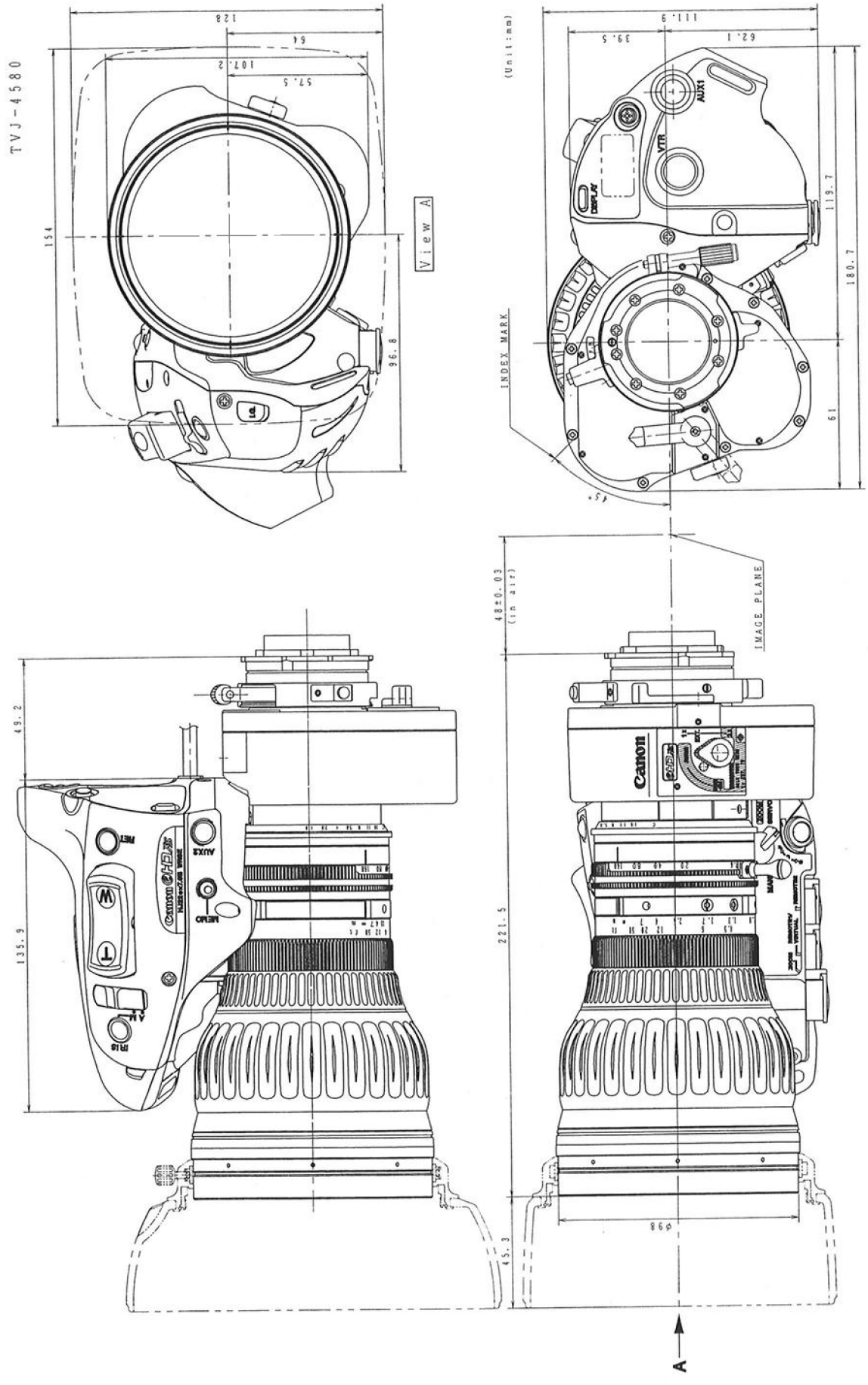

(22) HJ22ex7.6B WASE

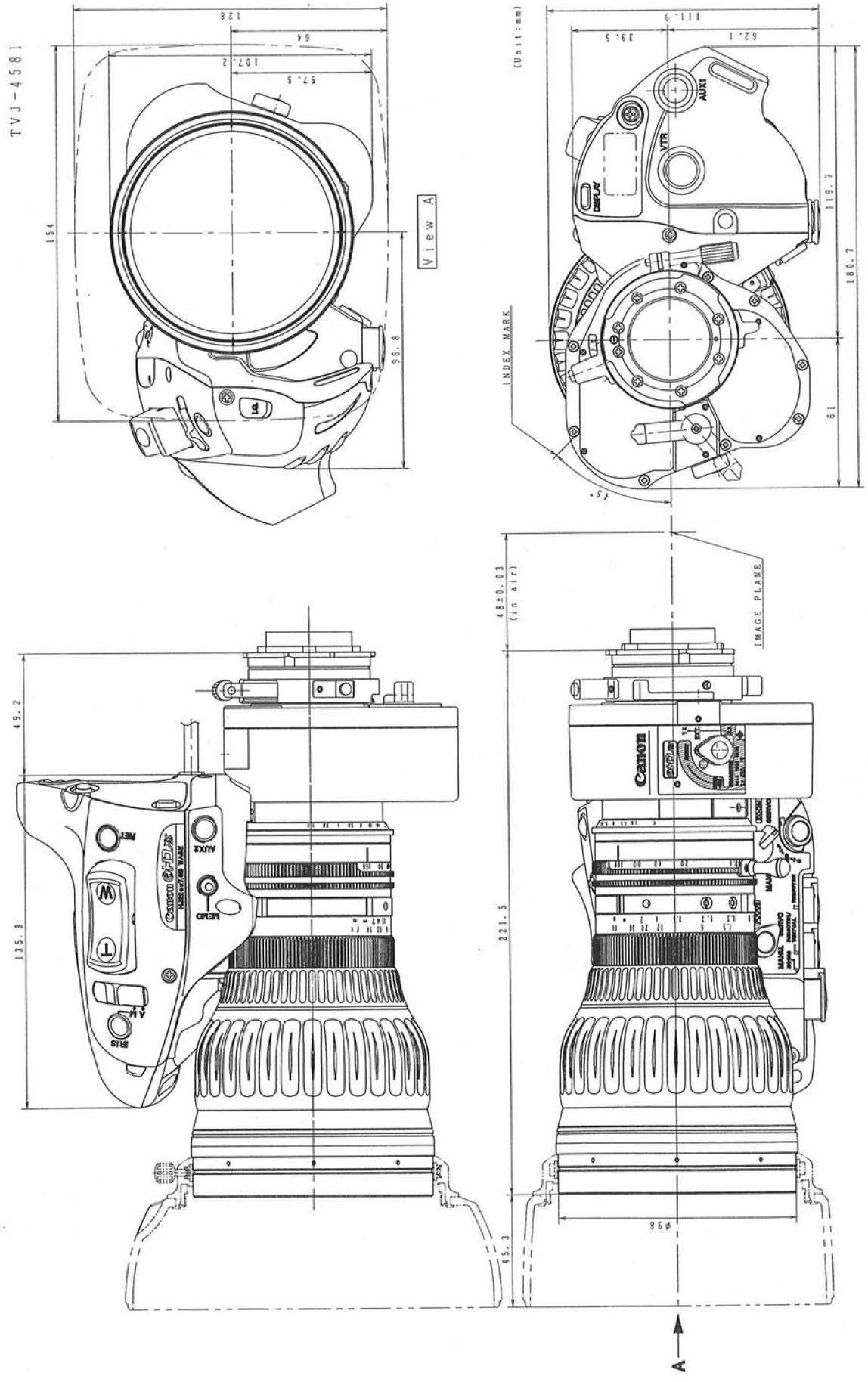

(23) HJ22ex7.6B VRSE

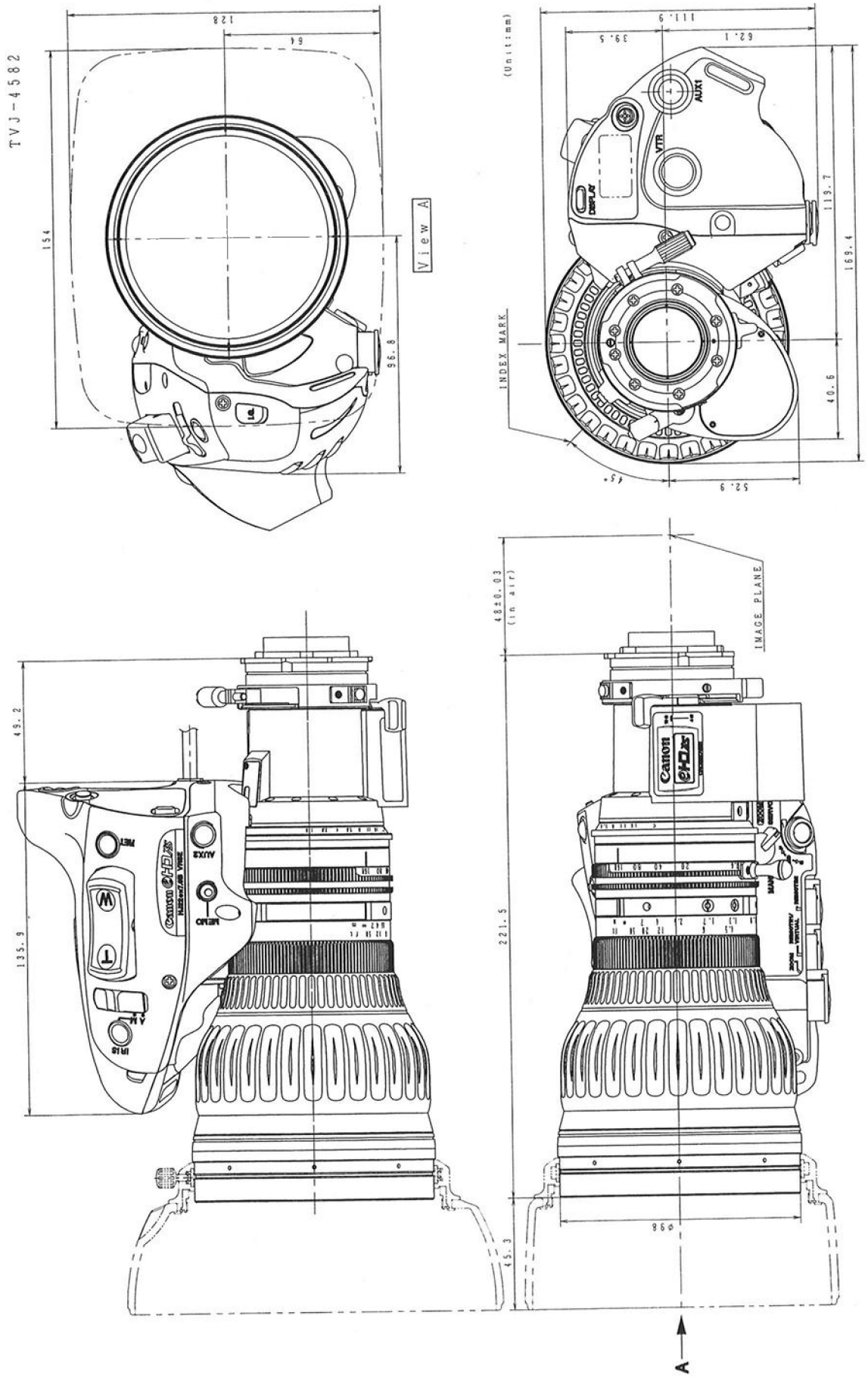

(24) HJ22ex7.6B VASE

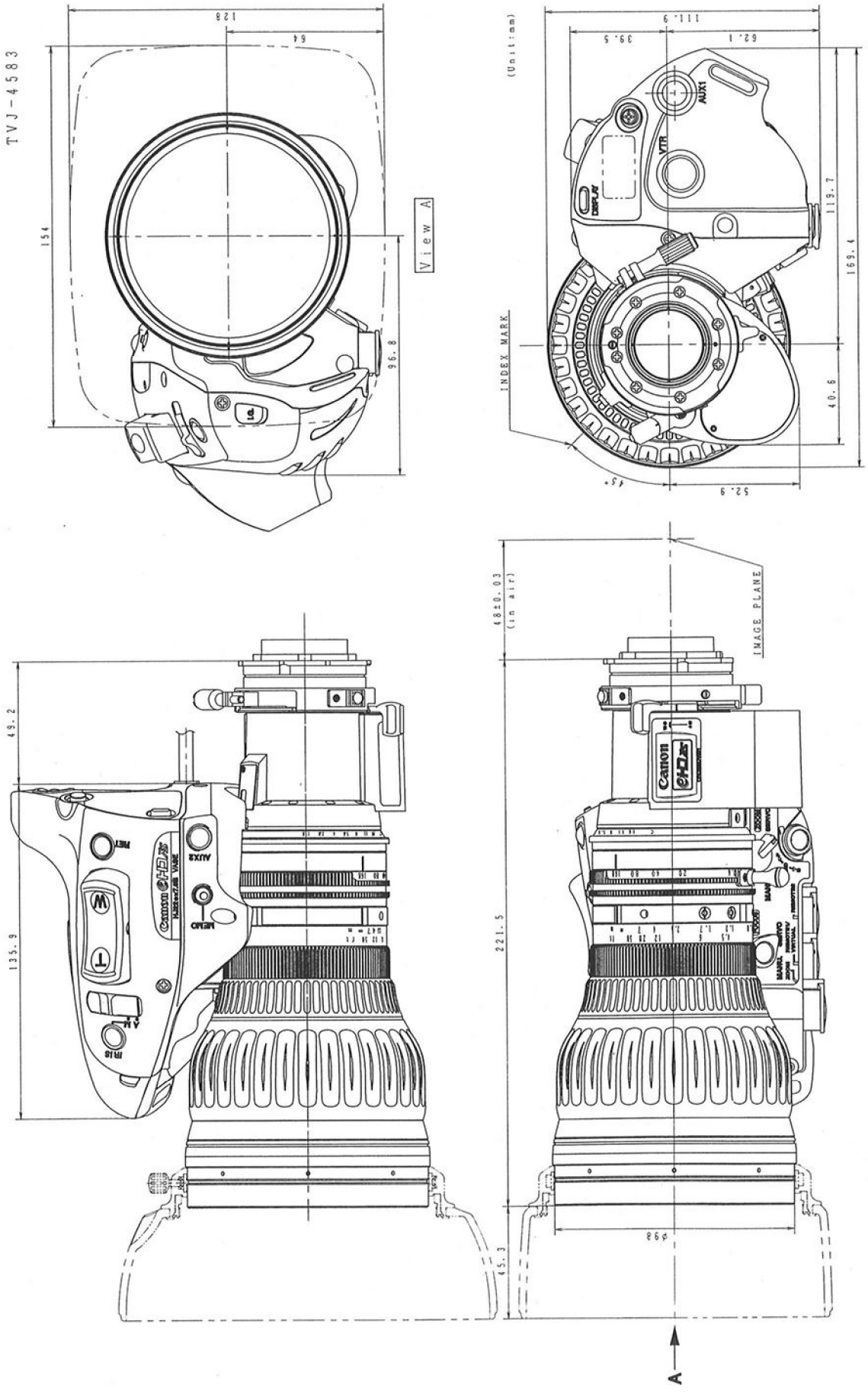

(25) HJ21ex7.5B IRSE

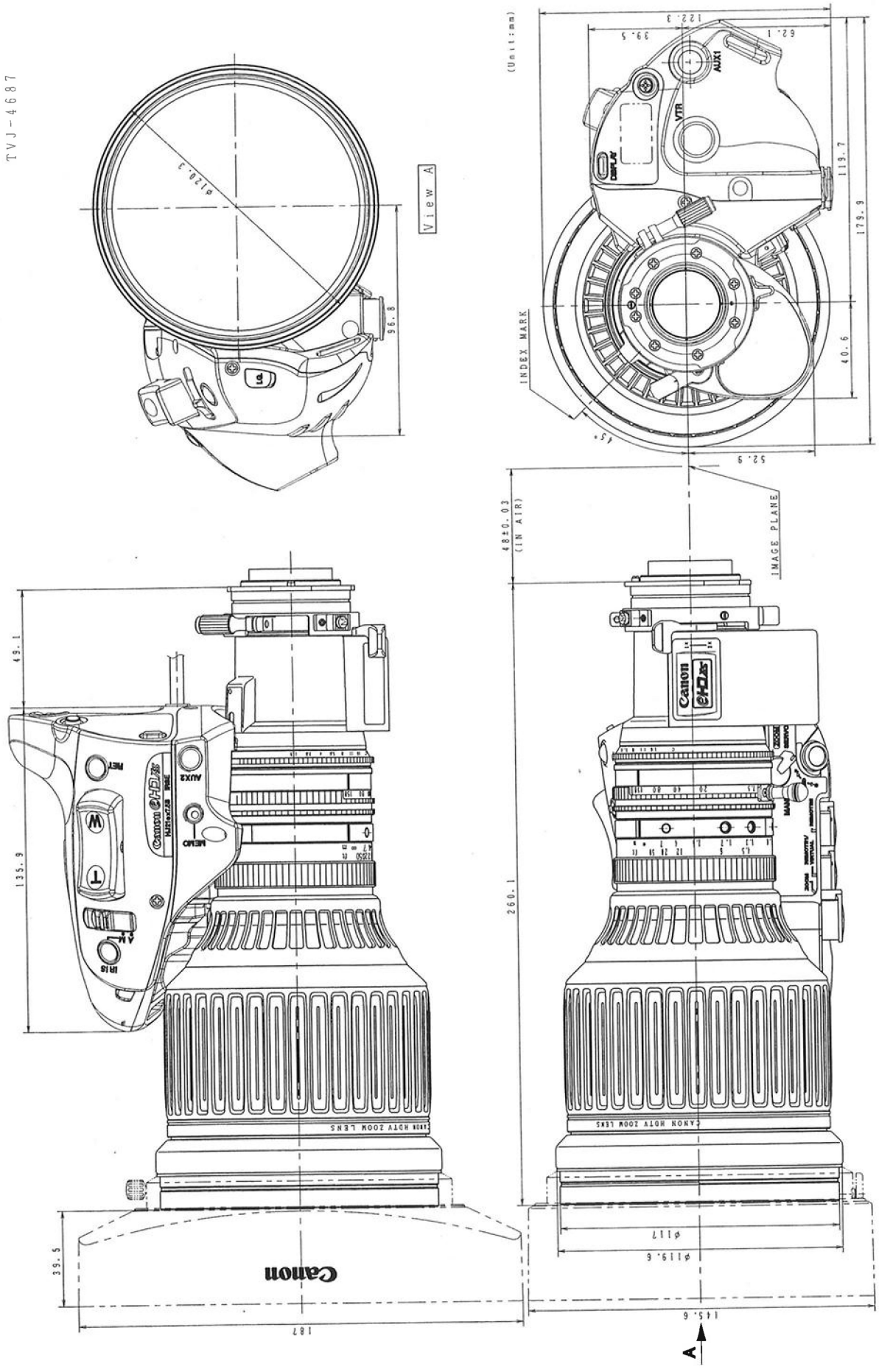

(26) HJ21ex7.5B IASE

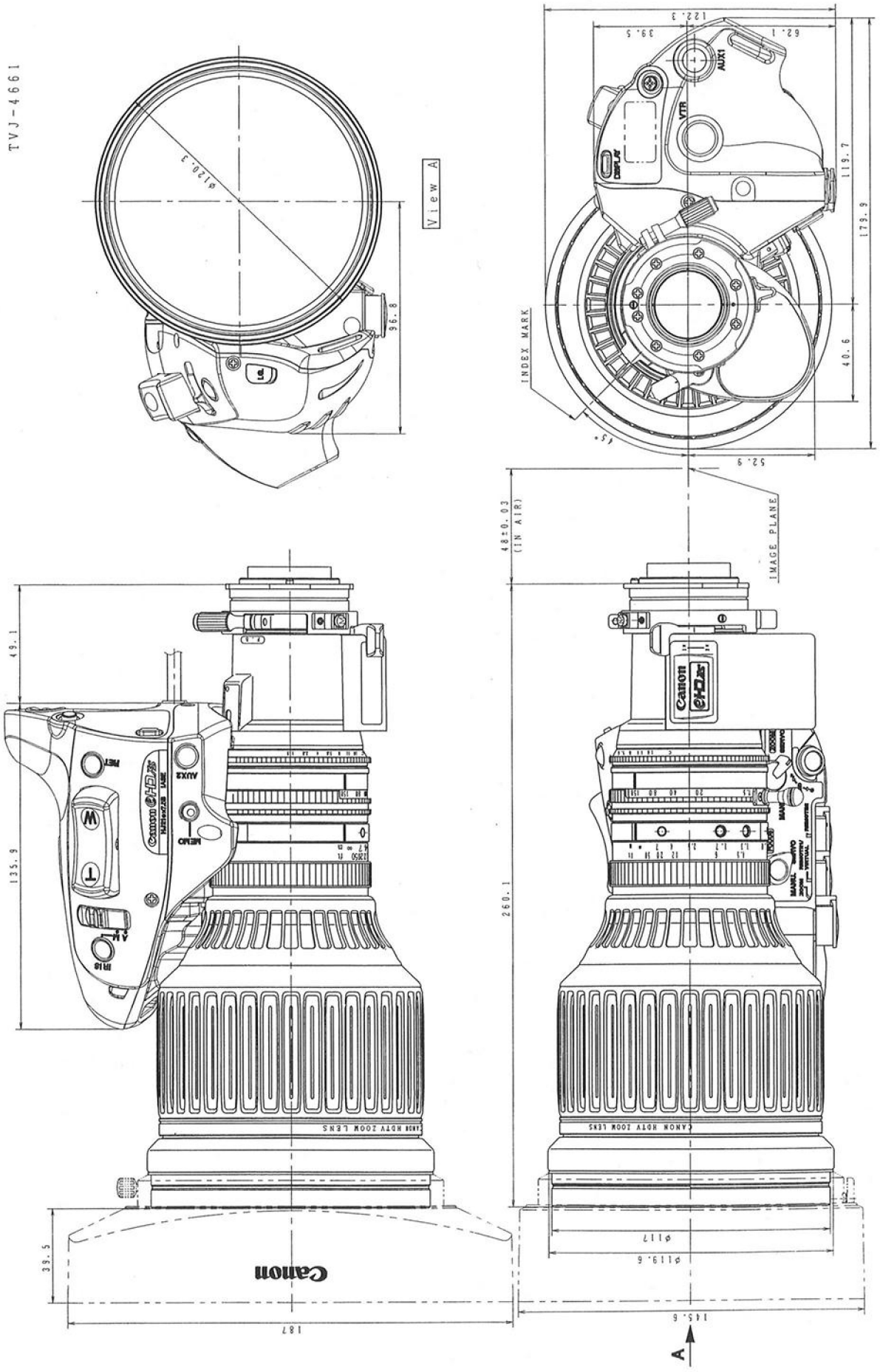

(27) HJ21ex7.5B WRSE

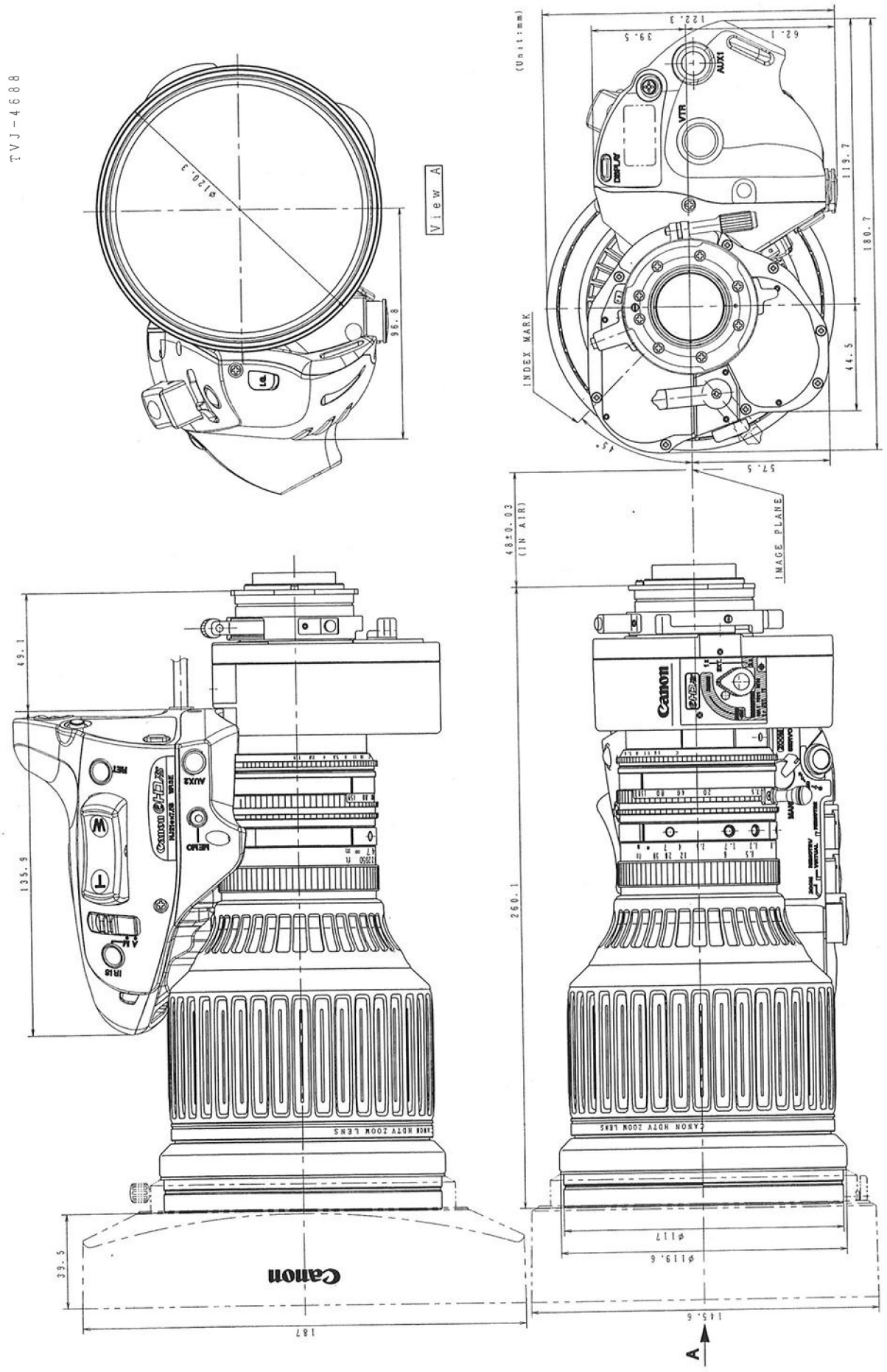

(28) HJ21ex7.5B WASE

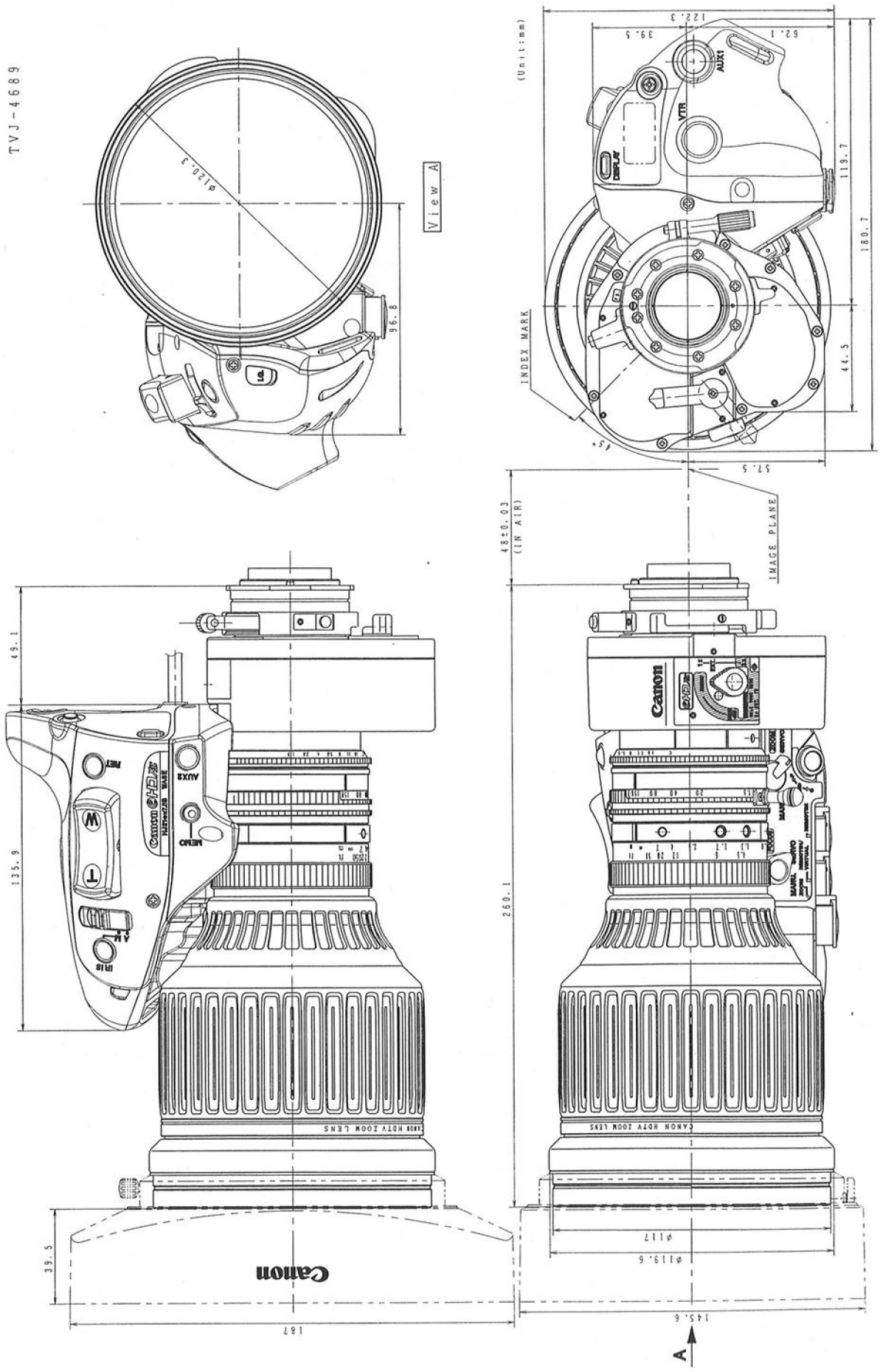

(29) HJ21ex7.5B VRSE

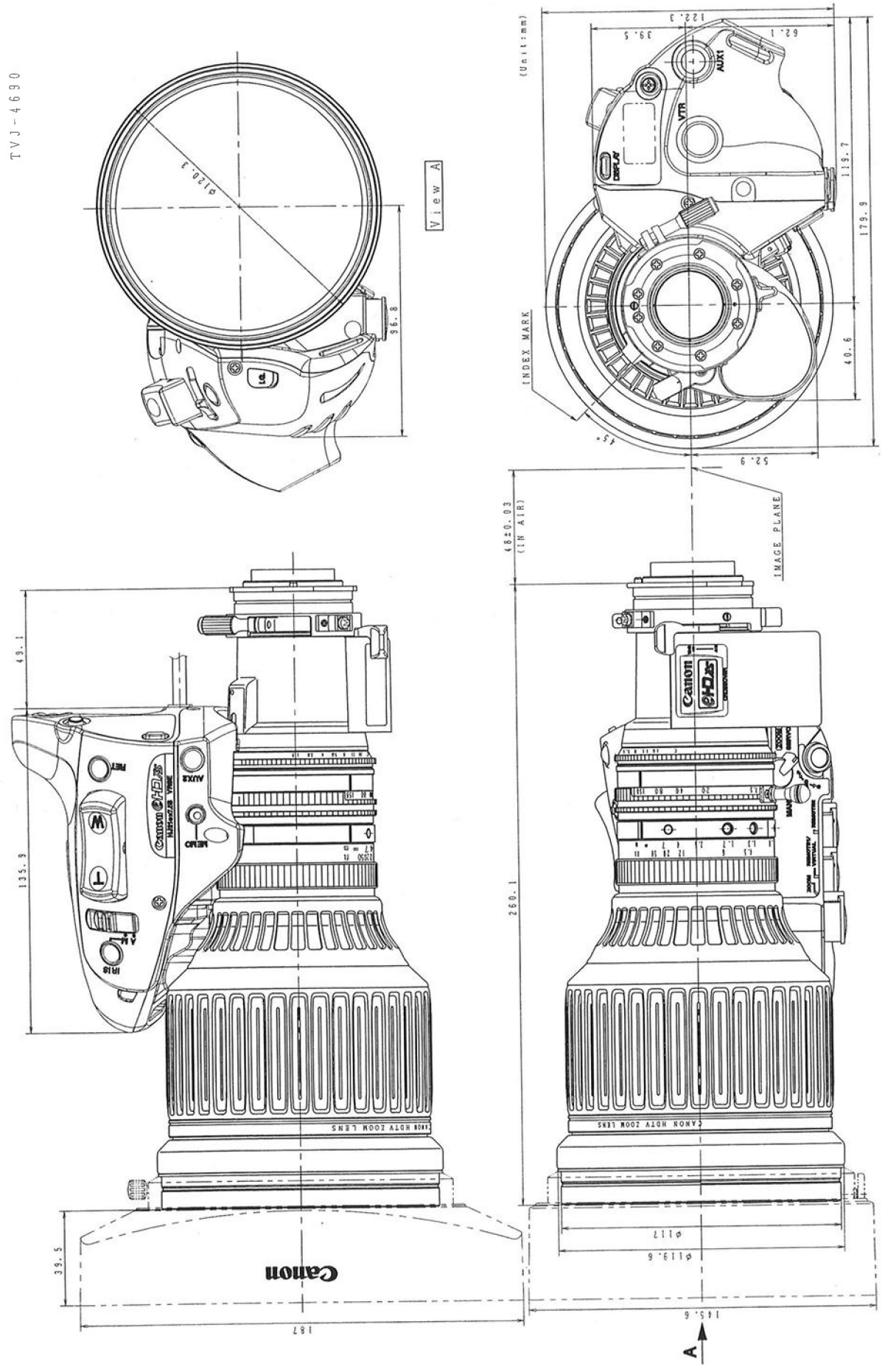

(30) HJ21ex7.5B VASE

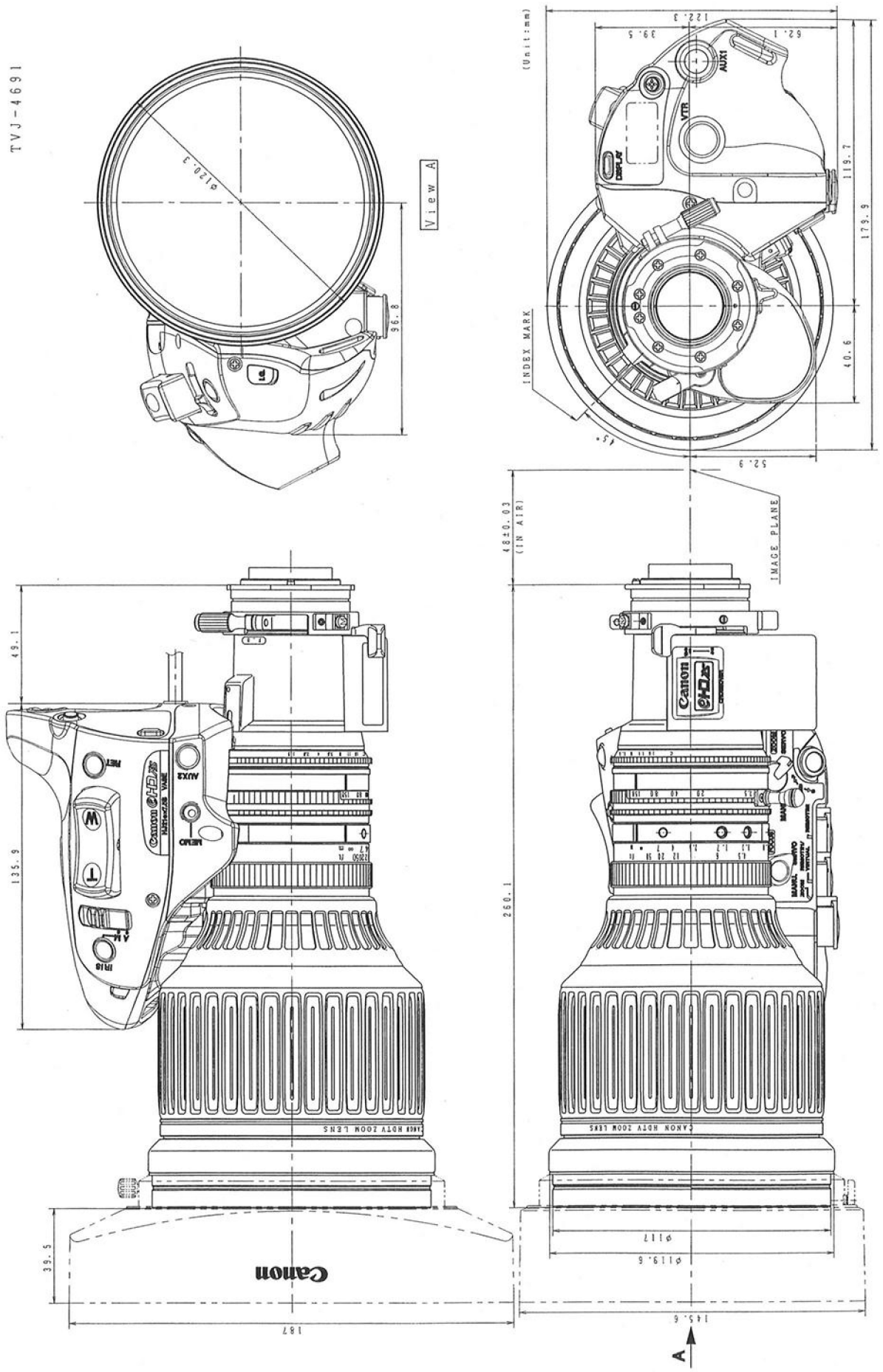

2. 総合結線図 / GENERAL CIRCUIT DIAGRAM

(1) IRSE

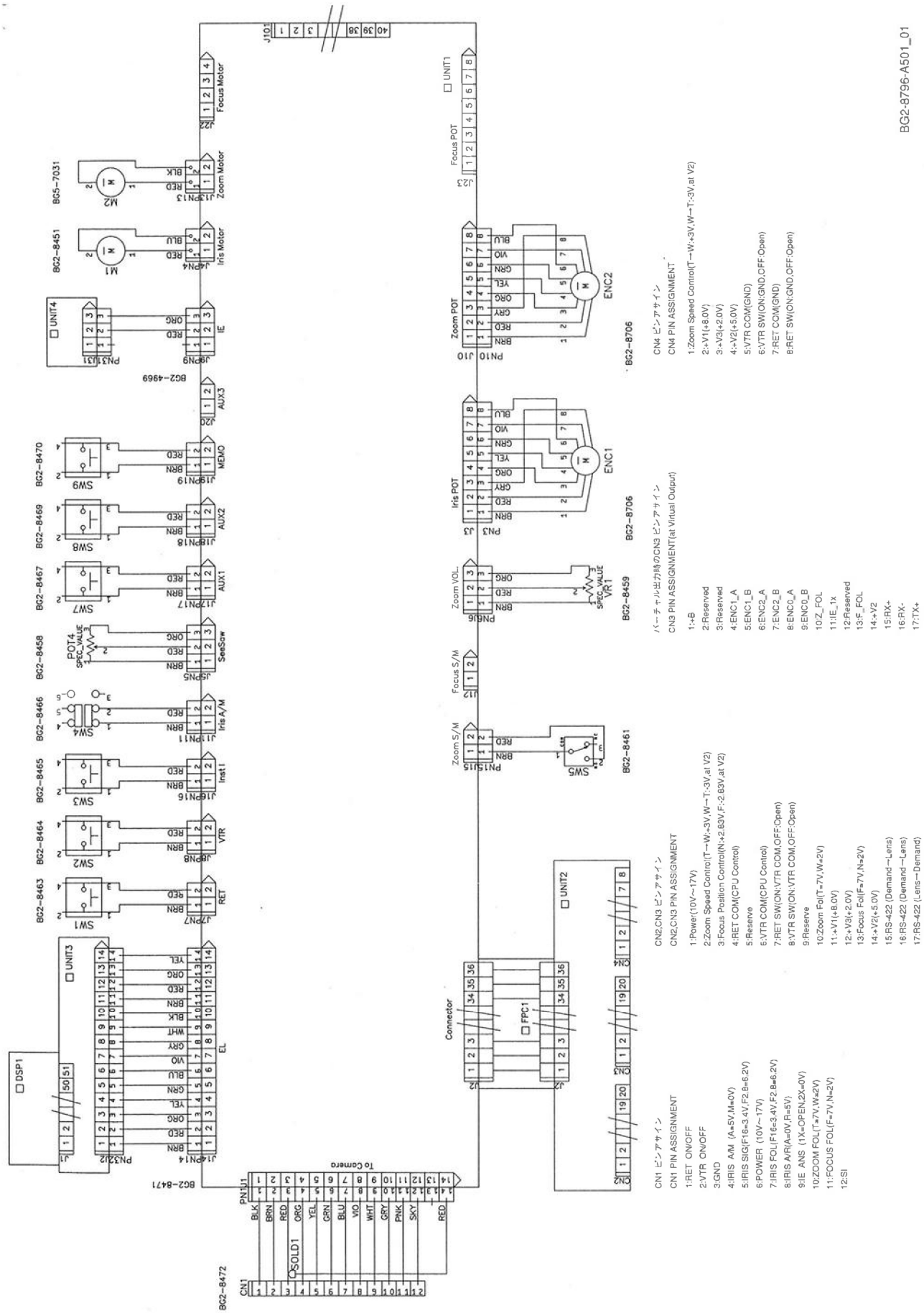

(2) IASE

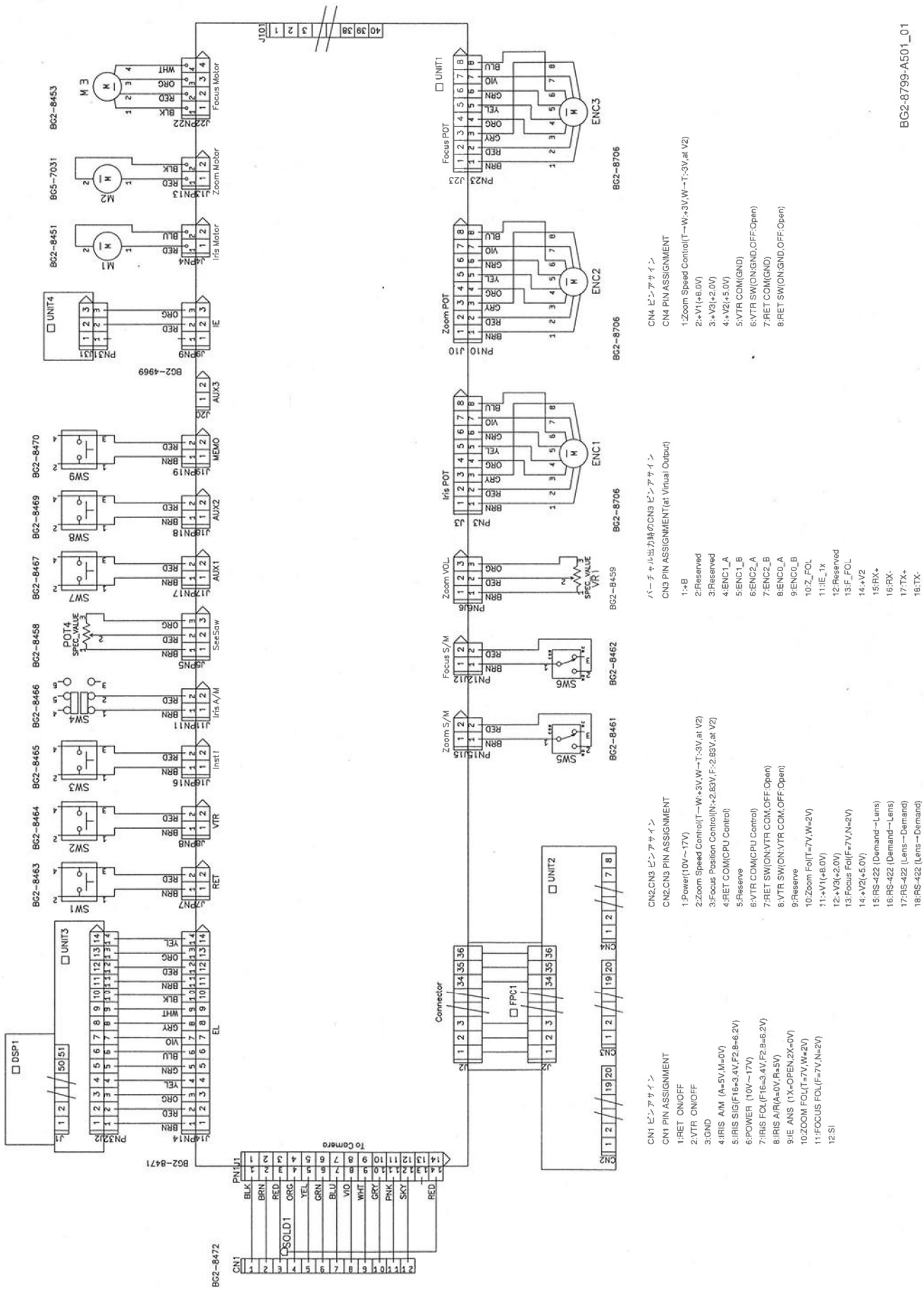
BG2-8799-A501_01
CN1 ピンアサイン
CN1 PIN ASSIGNMENT
1:RET ON/OFF
2:VTR ON/OFF
3:GND
4:IRIS A/M (A=5V,M=0V)
5:IRIS SIG(F16=3.4V,F2.8=6.2V)
6:POWER (10V～17V)
7:IRIS FOL(F16=3.4V,F2.8=6.2V)
8:IRIS A/R(A=0V,R=5V)
9:IE ANS (1X=OPEN,2X=0V)
10:ZOOM FOL(T=7V,W=2V)
11:FOCUS FOL(F=7V,N=2V)
12:SI
CN2,CN3 ピンアサイン
CN2,CN3 PIN ASSIGNMENT
1:Power(10V～17V)
2:Zoom Speed Control(T→W:+3V,W→T:-3V,at V2)
3:Focus Position Control(N:+2.83V,F:-2.83V,at V2)
4:RET COM(CPU Control)
5:Reserve
6:VTR COM(CPU Control)
7:RET SW(ON:VTR COM,OFF:Open)
8:VTR SW(ON:VTR COM,OFF:Open)
9:Reserve
10:Zoom Fol(T=7V,W=2V)
11:+V1(+8.0V)
12:+V3(+2.0V)
13:Focus Fol(F=7V,N=2V)
14:+V2(+5.0V)
15:RS-422 (Demand→Lens)
16:RS-422 (Demand→Lens)
17:RS-422 (Lens→Demand)
18:RS-422 (Lens→Demand)
19:Demand Detect(PC・ROM WRITER:GND,DEM:OPEN)
20:GND
バーチャル出力時のCN3 ピンアサイン
CN3 PIN ASSIGNMENT(at Virtual Output)
1:+B
2:Reserved
3:Reserved
4:ENC1_A
5:ENC1_B
6:ENC2_A
7:ENC2_B
8:ENC0_A
9:ENC0_B
10:Z_FOL
11:IE_1x
12:Reserved
13:F_FOL
14:+V2
15:RX+
16:RX-
17:TX+
18:TX-
19:Func_SEL
20:GND
CN4 ピンアサイン
CN4 PIN ASSIGNMENT
1:Zoom Speed Control(T→W:+3V,W→T:-3V,at V2)
2:+V1(+8.0V)
3:+V3(+2.0V)
4:+V2(+5.0V)
5:VTR COM(GND)
6:VTR SW(ON:GND,OFF:Open)
7:RET COM(GND)
8:RET SW(ON:GND,OFF:Open)
DSP1
UNIT3
UNIT1
UNIT2
UNIT4
Connector
FPC1
EL
To Camera
BG2-8471
BG2-8472
SOLD1
Focus Motor
Zoom Motor
Iris Motor
IE
MEMO
AUX3
AUX2
AUX1
SeeSaw
Iris A/M
Inst.I
VTR
RET
Focus POT
Zoom POT
Iris POT
Zoom VOL
Focus S/M
Zoom S/M
ENC3
ENC2
ENC1
BG2-8706
BG2-8459
BG2-8462
BG2-8461
BG2-4969
BG2-8453
BG5-7031
BG2-8451
BG2-8470
BG2-8469
BG2-8467
BG2-8458
BG2-8466
BG2-8465
BG2-8464
BG2-8463

(3) WRSE

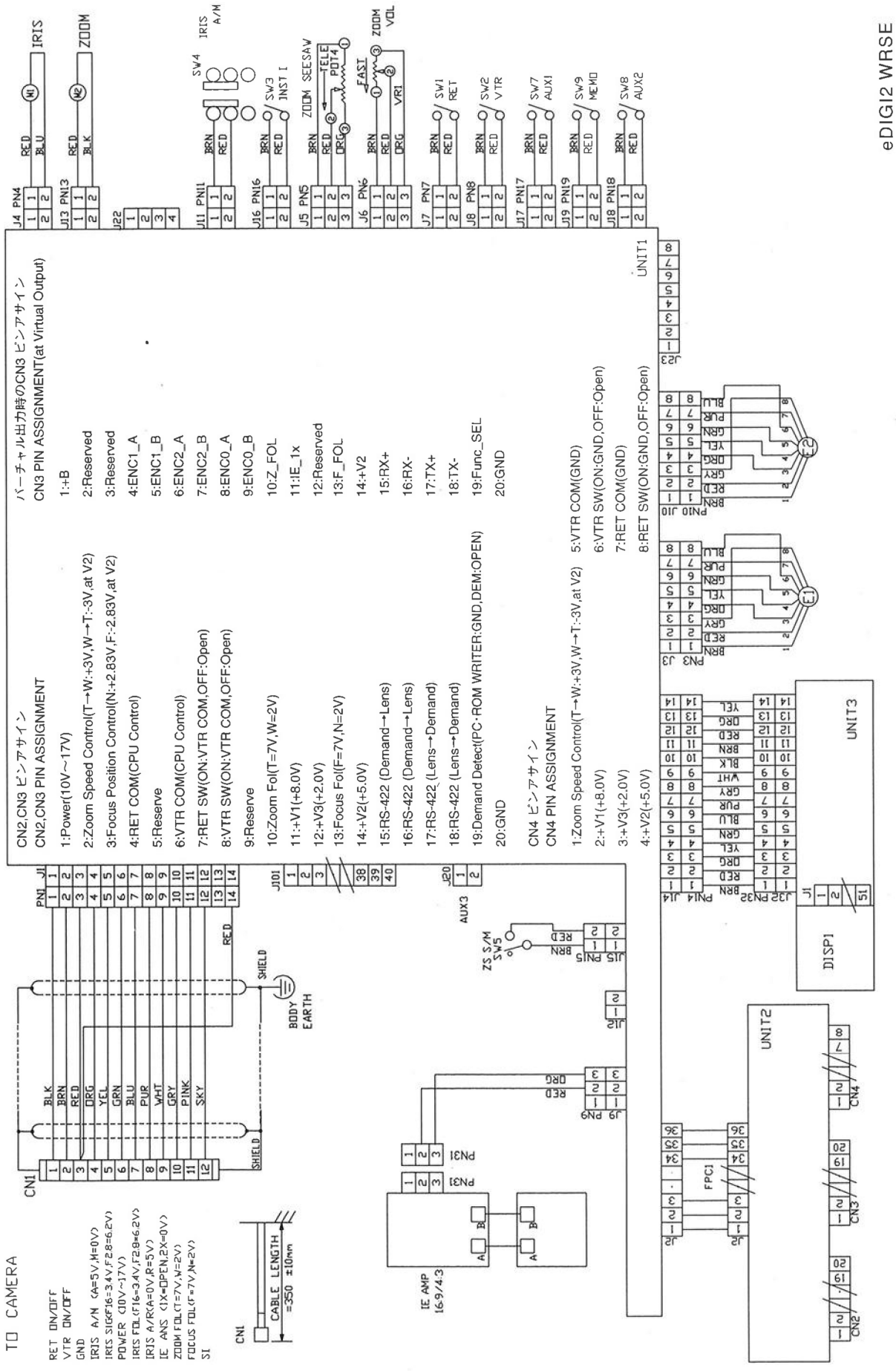
eDIGI2 WRSE
CN2,CN3 ピンアサイン
CN2,CN3 PIN ASSIGNMENT
バーチャル出力時のCN3 ピンアサイン
CN3 PIN ASSIGNMENT(at Virtual Output)
1:Power(10V~17V)
1:+B
2:Zoom Speed Control(T→W:+3V,W→T:-3V,at V2)
2:Reserved
3:Focus Position Control(N:+2.83V,F:-2.83V,at V2)
3:Reserved
4:RET COM(CPU Control)
4:ENC1_A
5:Reserve
5:ENC1_B
6:VTR COM(CPU Control)
6:ENC2_A
7:RET SW(ON:VTR COM,OFF:Open)
7:ENC2_B
8:VTR SW(ON:VTR COM,OFF:Open)
8:ENC0_A
9:Reserve
9:ENC0_B
10:Zoom Fol(T=7V,W=2V)
10:Z_FOL
11:+V1(+8.0V)
11:IE_1x
12:+V3(+2.0V)
12:Reserved
13:Focus Fol(F=7V,N=2V)
13:F_FOL
14:+V2(+5.0V)
14:+V2
15:RS-422 (Demand→Lens)
15:RX+
16:RS-422 (Demand→Lens)
16:RX-
17:RS-422 (Lens→Demand)
17:TX+
18:RS-422 (Lens→Demand)
18:TX-
19:Demand Detect(PC:ROM WRITER:GND,DEM:OPEN)
19:Func_SEL
20:GND
20:GND
CN4 ピンアサイン
CN4 PIN ASSIGNMENT
1:Zoom Speed Control(T→W:+3V,W→T:-3V,at V2)
5:VTR COM(GND)
2:+V1(+8.0V)
6:VTR SW(ON:GND,OFF:Open)
3:+V3(+2.0V)
7:RET COM(GND)
4:+V2(+5.0V)
8:RET SW(ON:GND,OFF:Open)
IRIS
ZOOM
IRIS A/M
SW4
SW3 INST I
ZOOM SEESAW
TELE
FAST
PDT4
ZOOM VOL
VR1
SW1 RET
SW2 VTR
SW7 AUX1
SW9 MEMO
SW8 AUX2
UNIT1
UNIT2
UNIT3
DISP1
FPC1
CN1
CN2
CN3
CN4
CN5
CN6
CN7
CN8
CN9
CN10
CN11
CN12
CN13
CN14
CN15
CN16
CN17
CN18
CN19
CN20
CN21
CN22
CN23
CN24
CN25
CN26
CN27
CN28
CN29
CN30
CN31
CN32
CN33
CN34
CN35
CN36
CN37
CN38
CN39
CN40
CN41
CN42
CN43
CN44
CN45
CN46
CN47
CN48
CN49
CN50
CN51
CN52
CN53
CN54
CN55
CN56
CN57
CN58
CN59
CN60
CN61
CN62
CN63
CN64
CN65
CN66
CN67
CN68
CN69
CN70
CN71
CN72
CN73
CN74
CN75
CN76
CN77
CN78
CN79
CN80
CN81
CN82
CN83
CN84
CN85
CN86
CN87
CN88
CN89
CN90
CN91
CN92
CN93
CN94
CN95
CN96
CN97
CN98
CN99
CN100
CN101
CN102
CN103
CN104
CN105
CN106
CN107
CN108
CN109
CN110
CN111
CN112
CN113
CN114
CN115
CN116
CN117
CN118
CN119
CN120
CN121
CN122
CN123
CN124
CN125
CN126
CN127
CN128
CN129
CN130
CN131
CN132
CN133
CN134
CN135
CN136
CN137
CN138
CN139
CN140
CN141
CN142
CN143
CN144
CN145
CN146
CN147
CN148
CN149
CN150
CN151
CN152
CN153
CN154
CN155
CN156
CN157
CN158
CN159
CN160
CN161
CN162
CN163
CN164
CN165
CN166
CN167
CN168
CN169
CN170
CN171
CN172
CN173
CN174
CN175
CN176
CN177
CN178
CN179
CN180
CN181
CN182
CN183
CN184
CN185
CN186
CN187
CN188
CN189
CN190
CN191
CN192
CN193
CN194
CN195
CN196
CN197
CN198
CN199
CN200
CN201
CN202
CN203
CN204
CN205
CN206
CN207
CN208
CN209
CN210
CN211
CN212
CN213
CN214
CN215
CN216
CN217
CN218
CN219
CN220
CN221
CN222
CN223
CN224
CN225
CN226
CN227
CN228
CN229
CN230
CN231
CN232
CN233
CN234
CN235
CN236
CN237
CN238
CN239
CN240
CN241
CN242
CN243
CN244
CN245
CN246
CN247
CN248
CN249
CN250
CN251
CN252
CN253
CN254
CN255
CN256
CN257
CN258
CN259
CN260
CN261
CN262
CN263
CN264
CN265
CN266
CN267
CN268
CN269
CN270
CN271
CN272
CN273
CN274
CN275
CN276
CN277
CN278
CN279
CN280
CN281
CN282
CN283
CN284
CN285
CN286
CN287
CN288
CN289
CN290
CN291
CN292
CN293
CN294
CN295
CN296
CN297
CN298
CN299
CN300
CN301
CN302
CN303
CN304
CN305
CN306
CN307
CN308
CN309
CN310
CN311
CN312
CN313
CN314
CN315
CN316
CN317
CN318
CN319
CN320
CN321
CN322
CN323
CN324
CN325
CN326
CN327
CN328
CN329
CN330
CN331
CN332
CN333
CN334
CN335
CN336
CN337
CN338
CN339
CN340
CN341
CN342
CN343
CN344
CN345
CN346
CN347
CN348
CN349
CN350
CN351
CN352
CN353
CN354
CN355
CN356
CN357
CN358
CN359
CN360
CN361
CN362
CN363
CN364
CN365
CN366
CN367
CN368
CN369
CN370
CN371
CN372
CN373
CN374
CN375
CN376
CN377
CN378
CN379
CN380
CN381
CN382
CN383
CN384
CN385
CN386
CN387
CN388
CN389
CN390
CN391
CN392
CN393
CN394
CN395
CN396
CN397
CN398
CN399
CN400
CN401
CN402
CN403
CN404
CN405
CN406
CN407
CN408
CN409
CN410
CN411
CN412
CN413
CN414
CN415
CN416
CN417
CN418
CN419
CN420
CN421
CN422
CN423
CN424
CN425
CN426
CN427
CN428
CN429
CN430
CN431
CN432
CN433
CN434
CN435
CN436
CN437
CN438
CN439
CN440
CN441
CN442
CN443
CN444
CN445
CN446
CN447
CN448
CN449
CN450
CN451
CN452
CN453
CN454
CN455
CN456
CN457
CN458
CN459
CN460
CN461
CN462
CN463
CN464
CN465
CN466
CN467
CN468
CN469
CN470
CN471
CN472
CN473
CN474
CN475
CN476
CN477
CN478
CN479
CN480
CN481
CN482
CN483
CN484
CN485
CN486
CN487
CN488
CN489
CN490
CN491
CN492
CN493
CN494
CN495
CN496
CN497
CN498
CN499
CN500
CN501
CN502
CN503
CN504
CN505
CN506
CN507
CN508
CN509
CN510
CN511
CN512
CN513
CN514
CN515
CN516
CN517
CN518
CN519
CN520
CN521
CN522
CN523
CN524
CN525
CN526
CN527
CN528
CN529
CN530
CN531
CN532
CN533
CN534
CN535
CN536
CN537
CN538
CN539
CN540
CN541
CN542
CN543
CN544
CN545
CN546
CN547
CN548
CN549
CN550
CN551
CN552
CN553
CN554
CN555
CN556
CN557
CN558
CN559
CN560
CN561
CN562
CN563
CN564
CN565
CN566
CN567
CN568
CN569
CN570
CN571
CN572
CN573
CN574
CN575
CN576
CN577
CN578
CN579
CN580
CN581
CN582
CN583
CN584
CN585
CN586
CN587
CN588
CN589
CN590
CN591
CN592
CN593
CN594
CN595
CN596
CN597
CN598
CN599
CN600
CN601
CN602
CN603
CN604
CN605
CN606
CN607
CN608
CN609
CN610
CN611
CN612
CN613
CN614
CN615
CN616
CN617
CN618
CN619
CN620
CN621
CN622
CN623
CN624
CN625
CN626
CN627
CN628
CN629
CN630
CN631
CN632
CN633
CN634
CN635
CN636
CN637
CN638
CN639
CN640
CN641
CN642
CN643
CN644
CN645
CN646
CN647
CN648
CN649
CN650
CN651
CN652
CN653
CN654
CN655
CN656
CN657
CN658
CN659
CN660
CN661
CN662
CN663
CN664
CN665
CN666
CN667
CN668
CN669
CN670
CN671
CN672
CN673
CN674
CN675
CN676
CN677
CN678
CN679
CN680
CN681
CN682
CN683
CN684
CN685
CN686
CN687
CN688
CN689
CN690
CN691
CN692
CN693
CN694
CN695
CN696
CN697
CN698
CN699
CN700
CN701
CN702
CN703
CN704
CN705
CN706
CN707
CN708
CN709
CN710
CN711
CN712
CN713
CN714
CN715
CN716
CN717
CN718
CN719
CN720
CN721
CN722
CN723
CN724
CN725
CN726
CN727
CN728
CN729
CN730
CN731
CN732
CN733
CN734
CN735
CN736
CN737
CN738
CN739
CN740
CN741
CN742
CN743
CN744
CN745
CN746
CN747
CN748
CN749
CN750
CN751
CN752
CN753
CN754
CN755
CN756
CN757
CN758
CN759
CN760
CN761
CN762
CN763
CN764
CN765
CN766
CN767
CN768
CN769
CN770
CN771
CN772
CN773
CN774
CN775
CN776
CN777
CN778
CN779
CN780
CN781
CN782
CN783
CN784
CN785
CN786
CN787
CN788
CN789
CN790
CN791
CN792
CN793
CN794
CN795
CN796
CN797
CN798
CN799
CN800
CN801
CN802
CN803
CN804
CN805
CN806
CN807
CN808
CN809
CN810
CN811
CN812
CN813
CN814
CN815
CN816
CN817
CN818
CN819
CN820
CN821
CN822
CN823
CN824
CN825
CN826
CN827
CN828
CN829
CN830
CN831
CN832
CN833
CN834
CN835
CN836
CN837
CN838
CN839
CN840
CN841
CN842
CN843
CN844
CN845
CN846
CN847
CN848
CN849
CN850
CN851
CN852
CN853
CN854
CN855
CN856
CN857
CN858
CN859
CN860
CN861
CN862
CN863
CN864
CN865
CN866
CN867
CN868
CN869
CN870
CN871
CN872
CN873
CN874
CN875
CN876
CN877
CN878
CN879
CN880
CN881
CN882
CN883
CN884
CN885
CN886
CN887
CN888
CN889
CN890
CN891
CN892
CN893
CN894
CN895
CN896
CN897
CN898
CN899
CN900
CN901
CN902
CN903
CN904
CN905
CN906
CN907
CN908
CN909
CN910
CN911
CN912
CN913
CN914
CN915
CN916
CN917
CN918
CN919
CN920
CN921
CN922
CN923
CN924
CN925
CN926
CN927
CN928
CN929
CN930
CN931
CN932
CN933
CN934
CN935
CN936
CN937
CN938
CN939
CN940
CN941
CN942
CN943
CN944
CN945
CN946
CN947
CN948
CN949
CN950
CN951
CN952
CN953
CN954
CN955
CN956
CN957
CN958
CN959
CN960
CN961
CN962
CN963
CN964
CN965
CN966
CN967
CN968
CN969
CN970
CN971
CN972
CN973
CN974
CN975
CN976
CN977
CN978
CN979
CN980
CN981
CN982
CN983
CN984
CN985
CN986
CN987
CN988
CN989
CN990
CN991
CN992
CN993
CN994
CN995
CN996
CN997
CN998
CN999
CN1000
TO CAMERA
RET ON/OFF
VTR ON/OFF
GND
IRIS A/M (A=5V,M=0V)
IRIS SIGF16=3.4V,F28=6.2V)
POWER (10V~17V)
IRIS FOL(F16=3.4V,F28=6.2V)
IRIS A/RCA=0V,R=5V)
IE ANS (1X=OPEN,2X=0V)
ZOOM FOL(T=7V,W=2V)
FOCUS FOL(F=7V,N=2V)
SI
BLK
BRN
RED
ORG
YEL
GRN
BLU
PUR
WHT
GRY
PINK
SKY
SHIELD
BODY EARTH
CABLE LENGTH =350 ±10mm
IE AMP 16.9/4.3
ZS S/M SW5
AUX3

(4) WASE

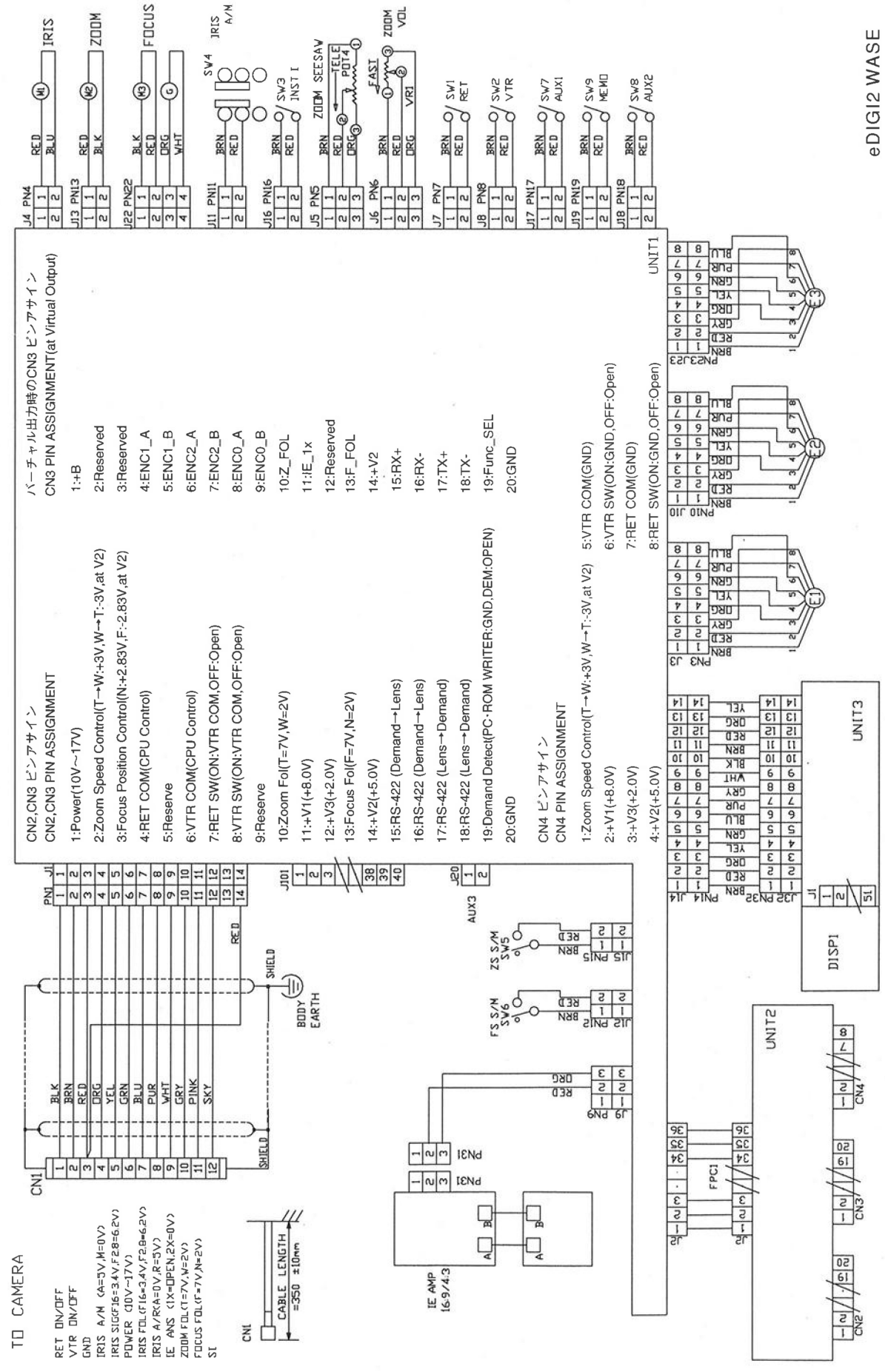
eDIGI2 WASE
CN2,CN3 ピンアサイン
CN2,CN3 PIN ASSIGNMENT
バーチャル出力時のCN3 ピンアサイン
CN3 PIN ASSIGNMENT(at Virtual Output)
1:Power(10V～17V)
1:+B
2:Zoom Speed Control(T→W:+3V,W→T:-3V,at V2)
2:Reserved
3:Focus Position Control(N:+2.83V,F:-2.83V,at V2)
3:Reserved
4:RET COM(CPU Control)
4:ENC1_A
5:Reserve
5:ENC1_B
6:VTR COM(CPU Control)
6:ENC2_A
7:RET SW(ON:VTR COM,OFF:Open)
7:ENC2_B
8:VTR SW(ON:VTR COM,OFF:Open)
8:ENC0_A
9:Reserve
9:ENC0_B
10:Zoom Fol(T=7V,W=2V)
10:Z_FOL
11:+V1(+8.0V)
11:IE_1x
12:+V3(+2.0V)
12:Reserved
13:Focus Fol(F=7V,N=2V)
13:F_FOL
14:+V2(+5.0V)
14:+V2
15:RS-422 (Demand→Lens)
15:RX+
16:RS-422 (Demand→Lens)
16:RX-
17:RS-422 (Lens→Demand)
17:TX+
18:RS-422 (Lens→Demand)
18:TX-
19:Demand Detect(PC-ROM WRITER:GND,DEM:OPEN)
19:Func_SEL
20:GND
20:GND
CN4 ピンアサイン
CN4 PIN ASSIGNMENT
1:Zoom Speed Control(T→W:+3V,W→T:-3V,at V2)
5:VTR COM(GND)
2:+V1(+8.0V)
6:VTR SW(ON:GND,OFF:Open)
3:+V3(+2.0V)
7:RET COM(GND)
4:+V2(+5.0V)
8:RET SW(ON:GND,OFF:Open)
IRIS
ZOOM
FOCUS
IRIS A/M
SW4
SW3 INST I
ZOOM SEESAW
TELE
POT4
FAST
ZOOM VOL
VR1
SW1 RET
SW2 VTR
SW7 AUX1
SW9 MEMO
SW8 AUX2
UNIT1
UNIT2
UNIT3
DISP1
FPC1
AUX3
ZS S/W SW5
FS S/W SW6
IE AMP 16:9/4.3
TO CAMERA
RET ON/OFF
VTR ON/OFF
GND
IRIS A/M (A=5V,M=0V)
IRIS SIG(F16=3.4V,F2.8=6.2V)
POWER (10V～17V)
IRIS FDL(F16=3.4V,F2.8=6.2V)
IRIS A/M(A=0V,M=5V)
IE ANS (IX=OPEN,2X=0V)
ZOOM FDL(T=7V,W=2V)
FOCUS FDL(F=7V,N=2V)
SI
CN1
CABLE LENGTH =350 ±10mm
BODY EARTH
SHIELD

(5) VRSE

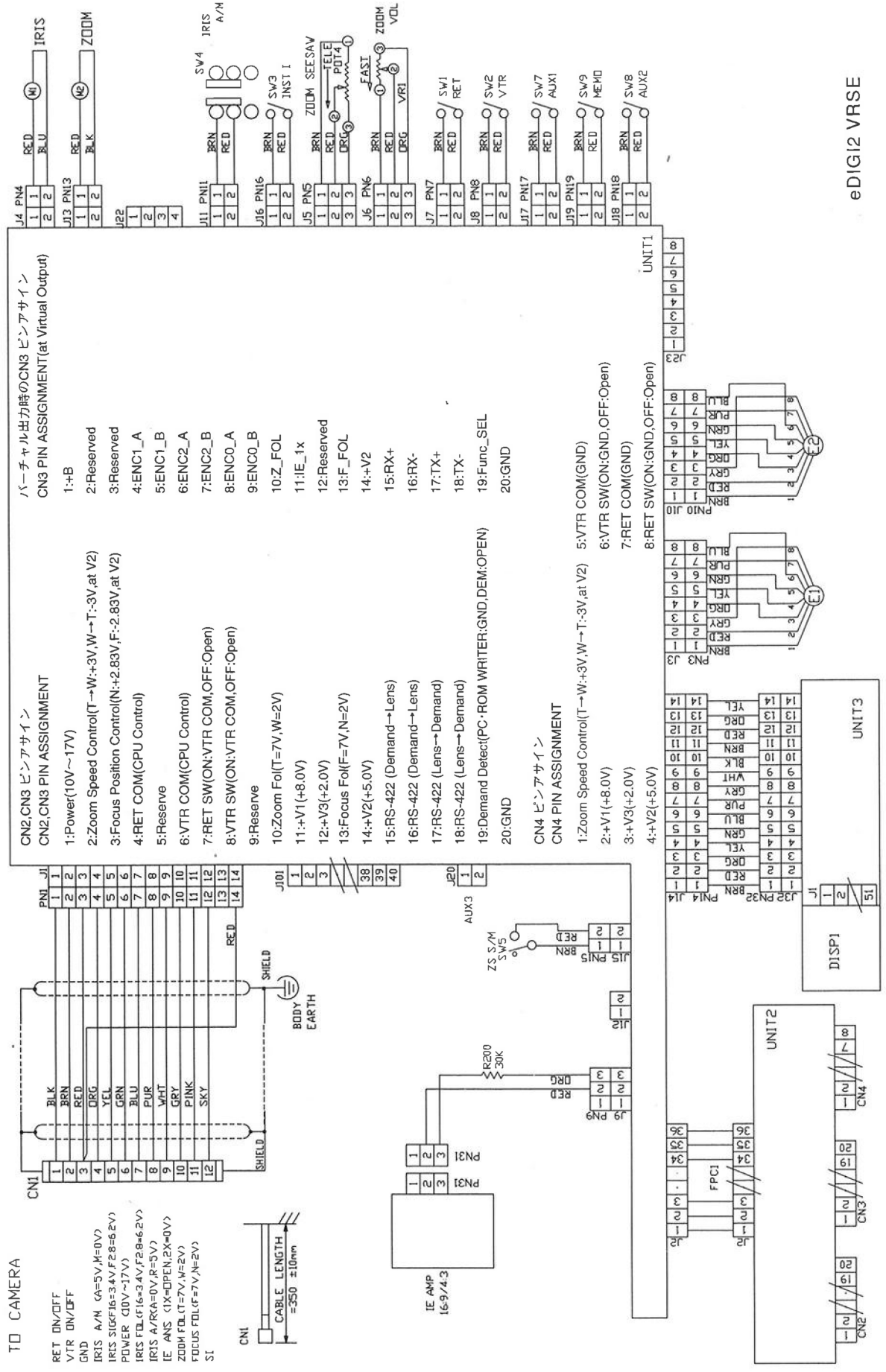
eDIGI2 VRSE
CN2,CN3 ピンアサイン
CN2,CN3 PIN ASSIGNMENT
CN4 ピンアサイン
CN4 PIN ASSIGNMENT
バーチャル出力時のCN3 ピンアサイン
CN3 PIN ASSIGNMENT(at Virtual Output)
1:Power(10V~17V)
2:Zoom Speed Control(T→W:+3V,W→T:-3V,at V2)
3:Focus Position Control(N:+2.83V,F:-2.83V,at V2)
4:RET COM(CPU Control)
5:Reserve
6:VTR COM(CPU Control)
7:RET SW(ON:VTR COM,OFF:Open)
8:VTR SW(ON:VTR COM,OFF:Open)
9:Reserve
10:Zoom Fol(T=7V,W=2V)
11:+V1(+8.0V)
12:+V3(+2.0V)
13:Focus Fol(F=7V,N=2V)
14:+V2(+5.0V)
15:RS-422 (Demand→Lens)
16:RS-422 (Demand→Lens)
17:RS-422 (Lens→Demand)
18:RS-422 (Lens→Demand)
19:Demand Detect(PC・ROM WRITER:GND,DEM:OPEN)
20:GND
1:Zoom Speed Control(T→W:+3V,W→T:-3V,at V2)
2:+V1(+8.0V)
3:+V3(+2.0V)
4:+V2(+5.0V)
5:VTR COM(GND)
6:VTR SW(ON:GND,OFF:Open)
7:RET COM(GND)
8:RET SW(ON:GND,OFF:Open)
TO CAMERA
RET ON/OFF
VTR ON/OFF
GND
IRIS A/M (A=5V,M=0V)
IRIS SIGF16=3.4V,F28=6.2V)
POWER (10V~17V)
IRIS FOL(F16=3.4V,F28=6.2V)
IRIS A/R(A=0V,R=5V)
IE ANS (1X=OPEN,2X=0V)
ZOOM FOL(T=7V,W=2V)
FOCUS FOL(F=7V,N=2V)
SI
CABLE LENGTH =350 ±10mm
IE AMP 16:9/4:3
R300 30K
ZS S/M SW5
AUX3
BODY EARTH
SHIELD
RED
BLK
BRN
RED
ORG
YEL
GRN
BLU
PUR
WHT
GRY
PINK
SKY
IRIS
ZOOM
SW4 IRIS A/M
SW3 INST I
ZOOM SEESAW
TELE
FAST
ZOOM VOL
VR1
SW1 RET
SW2 VTR
SW7 AUX1
SW9 MEMO
SW8 AUX2
UNIT1
UNIT2
UNIT3
DISP1
FPC1
CN1
CN2
CN3
CN4

(6) VASE

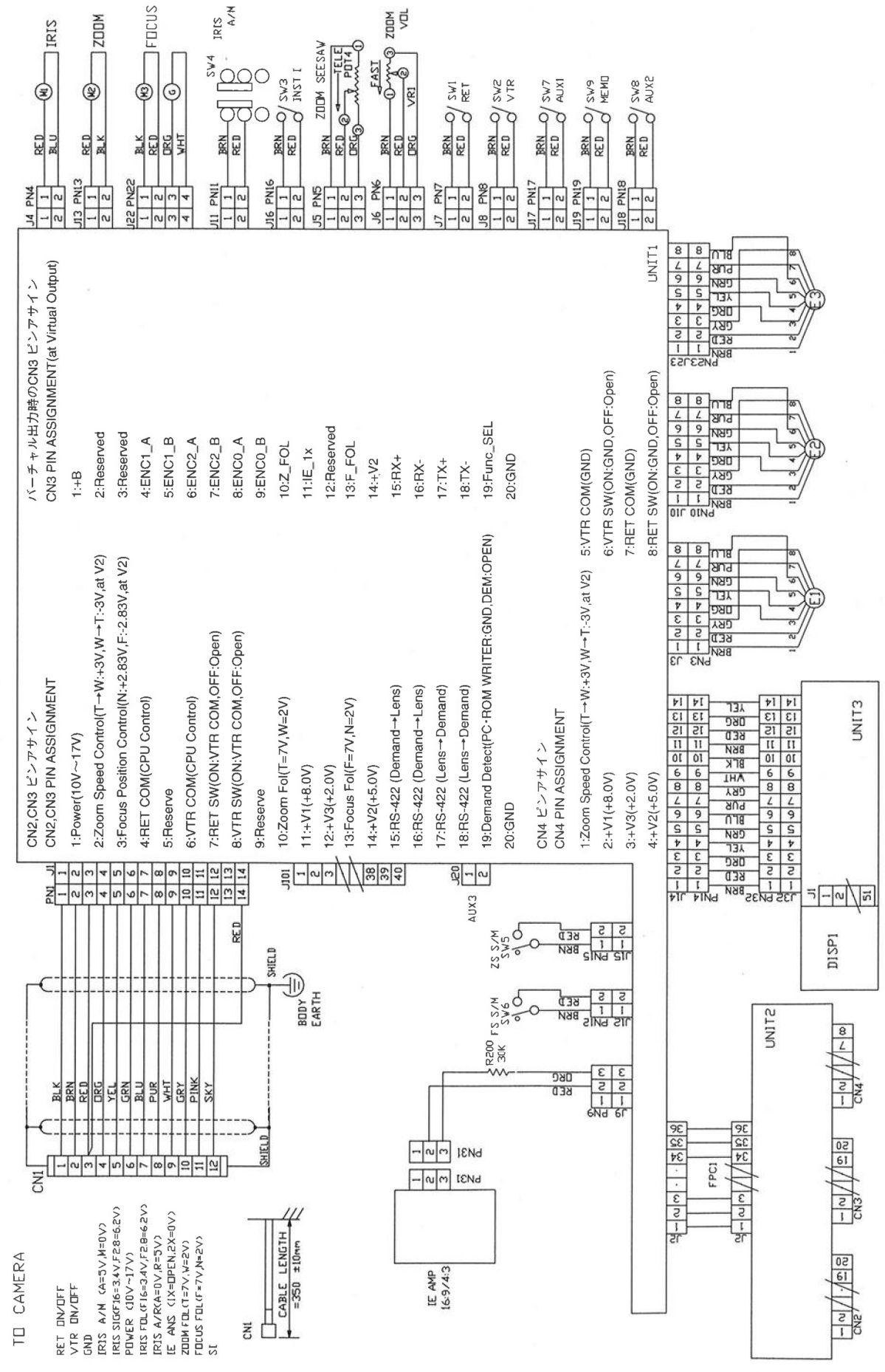
eDIGI2 VASE
CN2,CN3 ピンアサイン
CN2,CN3 PIN ASSIGNMENT
バーチャル出力時のCN3 ピンアサイン
CN3 PIN ASSIGNMENT(at Virtual Output)
1:+B
2:Reserved
3:Reserved
4:ENC1_A
5:ENC1_B
6:ENC2_A
7:ENC2_B
8:ENC0_A
9:ENC0_B
10:Z_FOL
11:IE_1x
12:Reserved
13:F_FOL
14:+V2
15:RX+
16:RX-
17:TX+
18:TX-
19:Func_SEL
20:GND
1:+B
2:Zoom Speed Control(T→W:+3V,W→T:-3V,at V2)
3:Focus Position Control(N:+2.83V,F:-2.83V,at V2)
4:RET COM(CPU Control)
5:Reserve
6:VTR COM(CPU Control)
7:RET SW(ON:VTR COM,OFF:Open)
8:VTR SW(ON:VTR COM,OFF:Open)
9:Reserve
10:Zoom Fol(T=7V,W=2V)
11:+V1(+8.0V)
12:+V3(+2.0V)
13:Focus Fol(F=7V,N=2V)
14:+V2(+5.0V)
15:RS-422 (Demand→Lens)
16:RS-422 (Demand→Lens)
17:RS-422 (Lens→Demand)
18:RS-422 (Lens→Demand)
19:Demand Detect(PC-ROM WRITER:GND,DEM:OPEN)
20:GND
CN4 ピンアサイン
CN4 PIN ASSIGNMENT
1:Zoom Speed Control(T→W:+3V,W→T:-3V,at V2)
2:+V1(+8.0V)
3:+V3(+2.0V)
4:+V2(+5.0V)
5:VTR COM(GND)
6:VTR SW(ON:GND,OFF:Open)
7:RET COM(GND)
8:RET SW(ON:GND,OFF:Open)
UNIT1
UNIT2
UNIT3
DISP1
IE AMP 16:9/4:3
CABLE LENGTH =350 ±10mm
TO CAMERA
RET ON/OFF
VTR ON/OFF
GND
IRIS A/M (A=5V,M=0V)
IRIS SIGF16=3.4V,F28=6.2V)
POWER (10V~17V)
IRIS FOL(F16=3.4V,F28=6.2V)
IRIS A/M(A=0V,R=5V)
IE ANS (IX=OPEN,2X=0V)
ZOOM FOL(T=7V,W=2V)
FOCUS FOL(F=7V,N=2V)
SI
IRIS
ZOOM
FOCUS
IRIS A/M
ZOOM SEESAW
ZOOM VOL
SW1 RET
SW2 VTR
SW3 INST I
SW4
SW5 ZS S/M
SW6 FS S/M
SW7 AUX1
SW8 AUX2
SW9 MEMO
R200 30K
BODY EARTH
SHIELD
AUX3
FPC1
CN1
CN2
CN3
CN4

ASIA / JAPAN _____ Canon Inc.
23-10, kiyohara-kogyo-danchi, Utsunomiya-shi,
Tochigi-ken, 321-3298, Japan

NORTH & SOUTH AMERICA _____ Canon U.S.A., Inc.
65 Challenger Road, Ridgefield Park, NJ, 07660,
U.S.A

CANADA _____ Canon Canada Inc.
6390 Dixie Road, Mississauga, Ontario, L5T 1P7,
Canada

EUROPE,AFRICA & MIDDLE EAST_ Canon Europa N.V.
Bovenkerkerweg 59-61, 1185 XB Amstelveen,
The Netherlands

OCEANIA _____ Canon Australia Pty. Ltd.
1 Thomas Holt Drive, North Ryde, NSW 2113,
Australia

CHINA _____ Canon (China) Co., Ltd.
15F Jinbao Building No.89 Jinbao Street, Dongcheng
District, Beijing 100005, China

Canon

キヤノン株式会社
放送機器事業部
〒321-3298
栃木県宇都宮市清原工業団地23-10
Telephone: 028-667-5711

CANON INC.
Broadcast Equipment Group
23-10, Kiyohara-kogyo-danchi, Utsunomiya-shi,
Tochigi-ken, 321-3298, Japan
Telephone: 81-(028)-667-5711

仕様・外観・商品構成等はお断りなく変更することがあります。

Subject to change without notice.

Pub.No. B-IM-20100B 0207S260 © CANON INC. PRINTED IN JAPAN